ILLUSTRATIONS for Appendix 5 Part 1 Pages 1 to 14

Fig. 1
PEP844
1911/1912 FIAT S74
IL4 150 mm/200 = 0.75 14,137 cc
190 HP @ 1,600 RPM

www.Italiaspeed.com

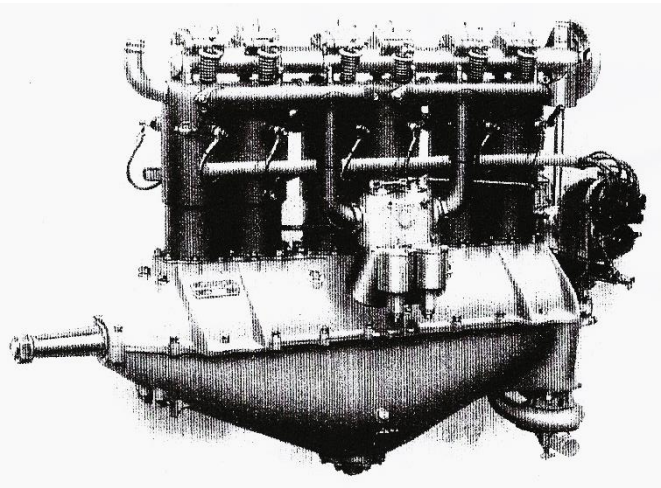

Daimler

Fig. 2
PEP340
1912 Daimler DF80
IL6 105 mm/140 = 0.75 7,274 cc
100 HP @ 2,000 RPM
As tested by Rolls-Royce in 1914; see DASO1097.
Daimler entry for 1912 Kaiserpreis aeroengine competition, later fitted with flywheel and clutch for use in the 1913 Mercedes racing car.

Fig. 3
Eg. 6
1914 Mercedes M93654
IL4 93 mm/165 = 0.564 4,483 cc
103.6 BHP @ 3,100 RPM

Engine of car owned by Miles Collier, restored by Eddie Berrisford. Photographed by his courtesy.
See also:-
1st Naturally-Aspirated Era (1NA)
at Fig.6A and Power Curve.

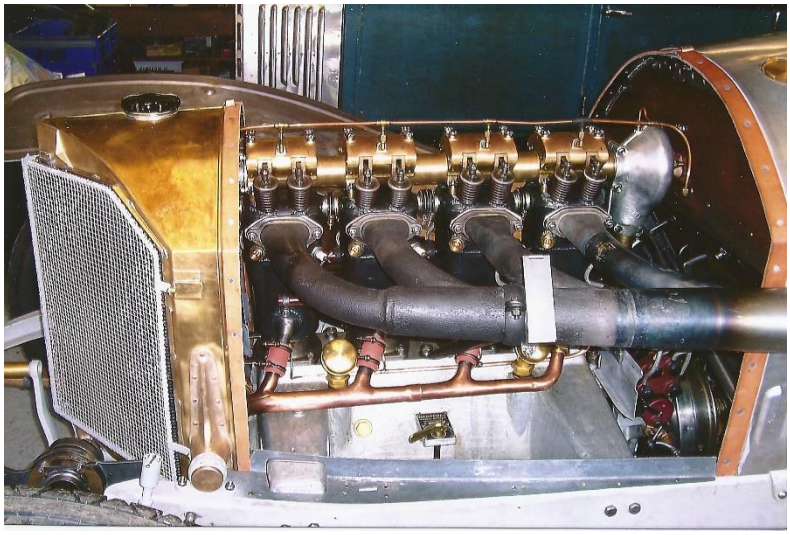

Fig. 4
PEP322
1914 Sunbeam TT
IL4 81.5 mm/156 = 0.522 3,255 cc
100 HP @ 3,000 RPM

See the 1st Naturally-Aspirated Era at Eg. 5 and Fig. 5C where a section is given of *either* a 1914 4.5 Litre Grand Prix Sunbeam, which had a new finger-follower valve gear (as shown); *or* the 1914 Dario Resta 3.3 Litre TT Sunbeam which was the prototype of that system (DASO 24).
Fig .4, a very clear section of the cylinder head, when greatly enlarged, shows by measuring from a known 18 mm spark plug that the Bore was 81.5 mm. The drawing is therefore the TT engine (the GP engine Bore was 94 mm).

It appears that, as well as the novel finger-followers to resist cam thrust, the Resta engine also had higher inlet valve lift (IVL = 10 mm v. 7.5) and increased open duration (IOD = 243^0 v 217) compared to the "Standard" engine for which power is given. See Significant Other Eg. SO5 for a Power Curve.

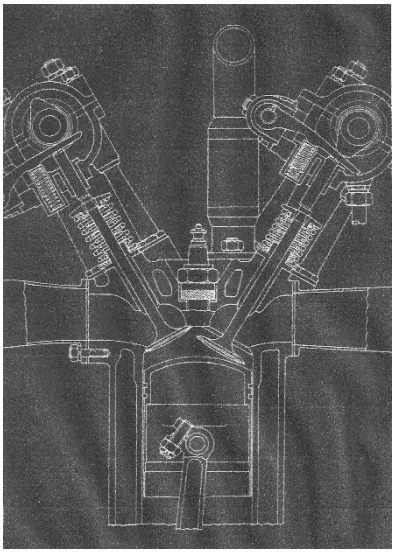

dovepublishing.co.uk (Eric Dymock's Blog)

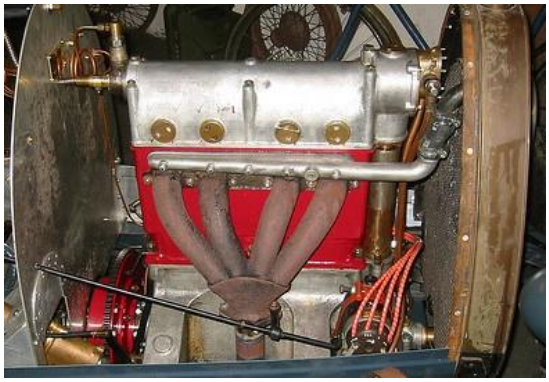

grahamlittle10

Fig. 5
PEP 347
1914 Bugatti Type 13
IL4 65.64/100 = 0.656 1,354 cc
30 HP @ 2,750 RPM

Apologies to Bugatti cognoscenti if this is not a 1914 type 13!
Corrections will be welcomed.

Fig.6
PEP 378
1920 Frontenac Indy
IL4 3 1/8''(79.375 mm)/5 15/16''(150.813) = 0.526
182.2 cid(2,985 cc)
98 HP @ 3.200 RPM

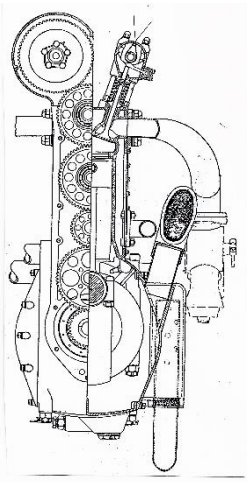

DASO 26

Fig. 7
PEP 377
1921 Aston Martin Voiturette
IL4 65 mm/112 = 0.580 1,487 cc
55 HP @ 4,500 RPM

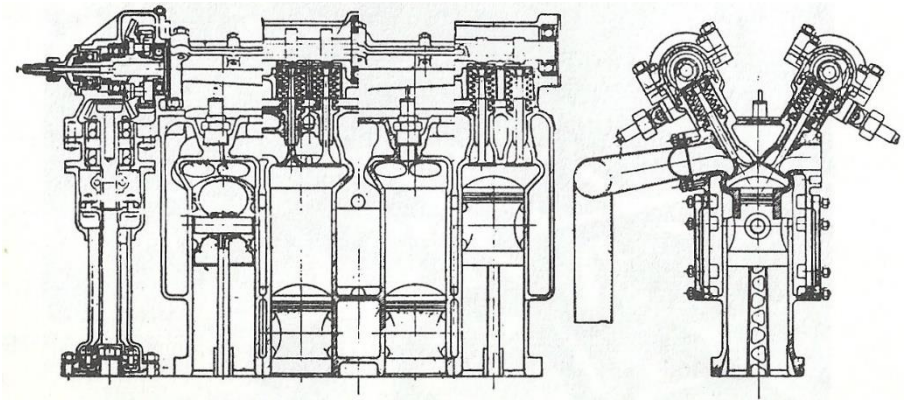

DASO 640

The "Top End" of the engine, shown here, was to a Peugeot design sold to Aston Martin, updated from pre-WW1 configuration with Ballot (post WW1 Henri)/Albert Morin-type inverted-cup tappets (DASO 26)). Note that the valve timing (DASO 640) was identical to the 1914 TT Sunbeam, which was copied from the 1913 3L Peugeot.

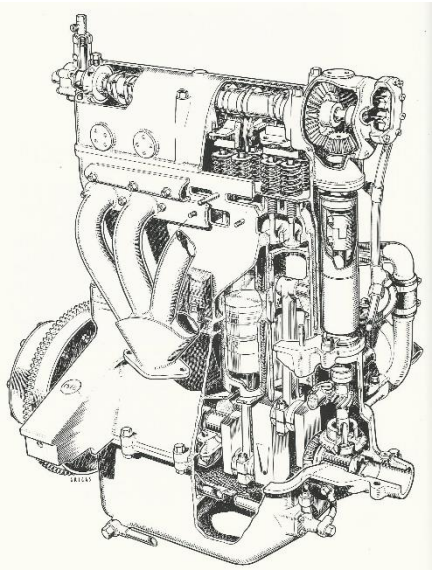

Conway "Bugatti Magnum"

Fig. 8
PEP 104
1922 Bugatti Type 23
IL4 68 mm/100 = 0.680 1,453 cc
40 HP @ 4,000 RPM

Further apologies to Bugatti experts if this is not a 1922 type 23, and very willing to be corrected.

At any rate, it is a very fine drawing and well worth displaying!

Fig. 9
PEP 367
1924 Mercedes M7294
IL4 70 mm/129 = 0.543 1,986 cc
120 HP @ 4,500 RPM

A cross-section of the cylinder head is given in the section "How many valves per cylinder?" at Fig. 21.

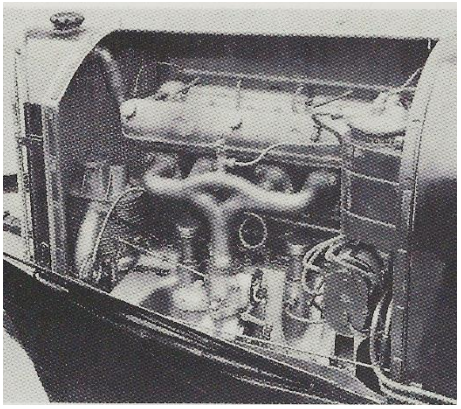

DASO 468

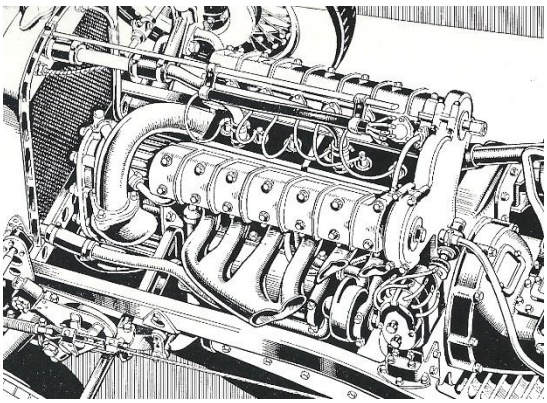

DASO 4

Fig. 10
PEP 281
1924 Sunbeam Grand Prix
IL6 67 mm/94 = 0.713 1,988 cc
138 HP @ 5,500 RPM

Fig. 11
PEP 141
1925 Bugatti Type 37
IL4 69 mm/100 = 0.69 1,496 cc
49 HP @ 4,200 RPM

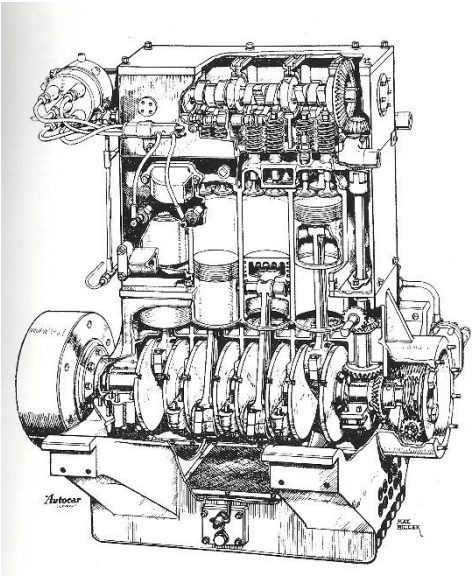

DASO 308

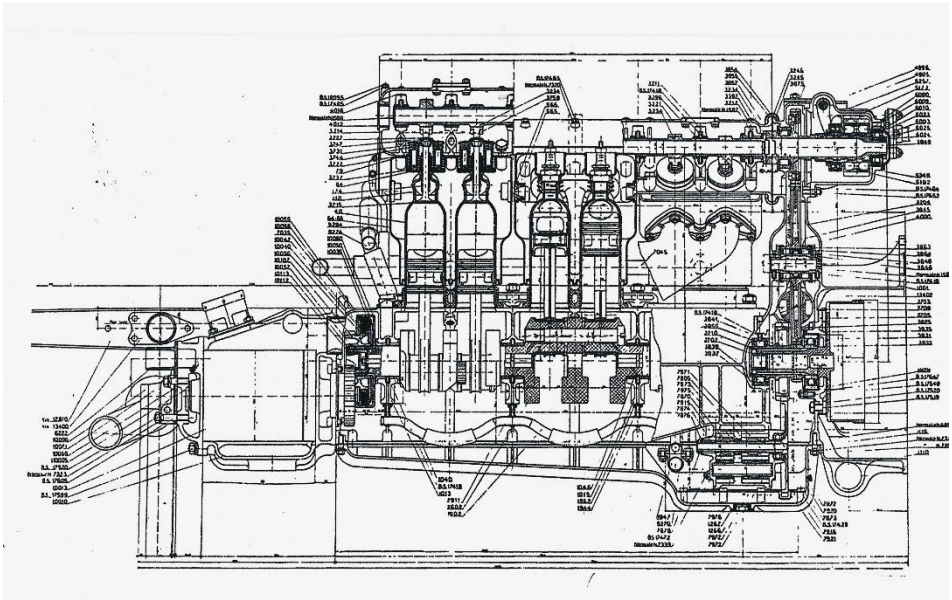

Fig. 12A
PEP 321
1927 FIAT T406
2 x coupled IL6
50 mm/63 = 0.794
1,484 cc
160 HP
@ 8,000 RPM

DASO 66

A cross-section of this unusual engine is shown on P.5, Fig. 12B

Fig. 12B

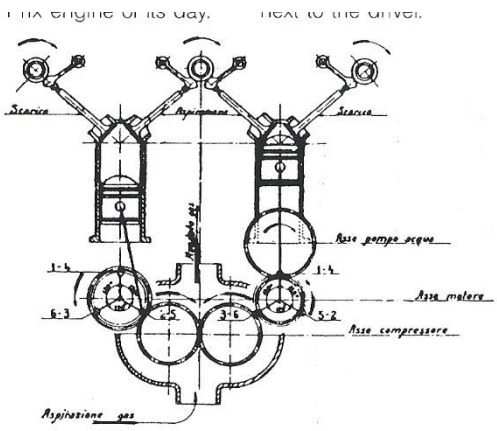

DASO 938

Fig. 13
PEP 415
1934 MG Magnette K3
IL6 57 mm/71 = 0.803 1,087
Fig. 13B shows the Roots-type supercharger mounted between the dumb-irons

13A

Classic-auctions.com

13B

flickriver.com

Fig. 14
PEP289
1936 Austin 750
IL4 2 3/8''/2 9/16'' = 0.927
[60.32 mm/65.09] = 744 cc
116 HP @ 9,000 RPM

During development piston-ring flutter was at least partially alleviated by reducing ring axial width to 1.5 mm – probably the 1st realisation of the importance of this dimension (see Note 13 Part II).

The IVP and PP tabled were "Sprint" ratings, probably only used eg. at Shelsley Walsh for a few minutes total running. The Roots-type supercharger was very inefficient at that level, but 10% water, 15% Ethanol and 75% Methanol cooled the charge considerably.

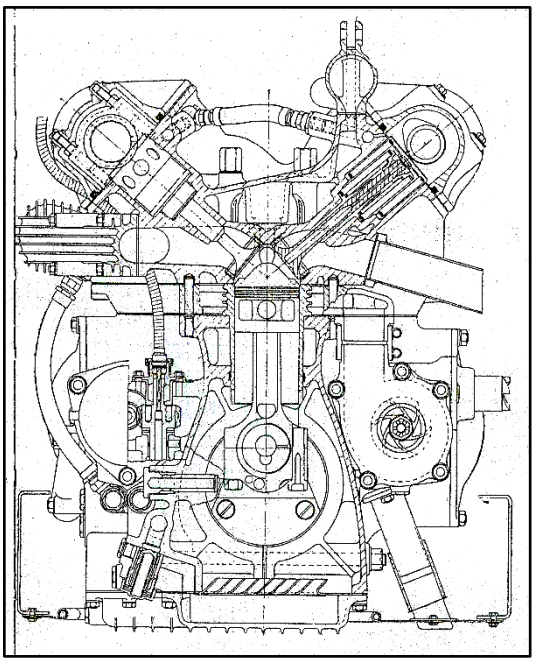

DASO 26

Fig. 15
PEP 464
1936 Seaman Delage
IL8 55.8 mm/76 = 0.734
1,487 cc
185 HP @ 8,000 RPM

This basically-1927 car was refurbished and up-rated very successfully in 1936 by Guilio Ramponi for Dick Seaman (see Notes 5 and 46).

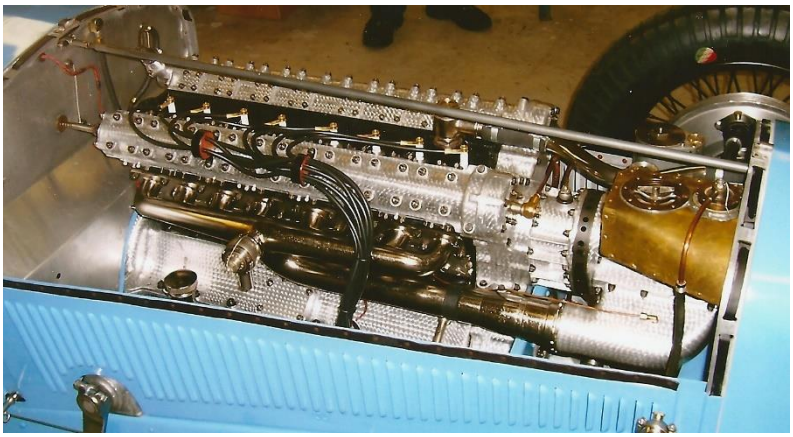

The picture is of a 1927 car owned by Miles Collier with the engine and chassis re-united by Eddie Berrisford. Photographed by his courtesy.

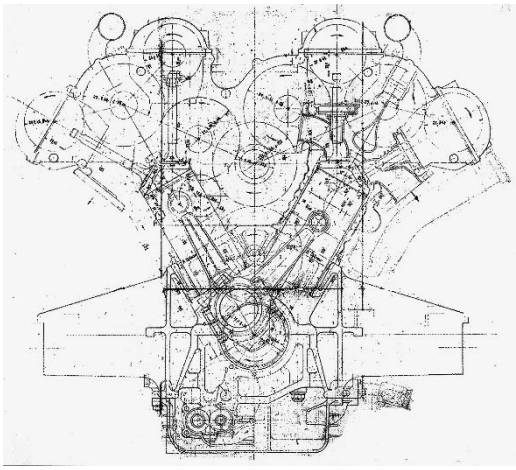

Fig. 16
PEP 436
1937 Mercedes-Benz Type DAB
60V12 82 mm/88 = 0.932 5,577 cc
670 HP @ 5,800 RPM.
This project drawing (from "Quicksilver Century" by Karl Ludvigsen (DASO 468)) shows an M25A (78 x 88) cylinder on the LHS and a M25AB (82 x 88) on the RHS. The engines were actually built with the AB cylinders (*hence* Type D*AB*, prime letters B & C having already been allocated*).*

Fig. 17

PEP 379
1938 Maserati 8CTF
IL8 69 mm/100 = 0.69 2,991 cc
390 HP @ 6,400 RPM
(*8 Cylindrici Testa Fissa (*Fixed Head))

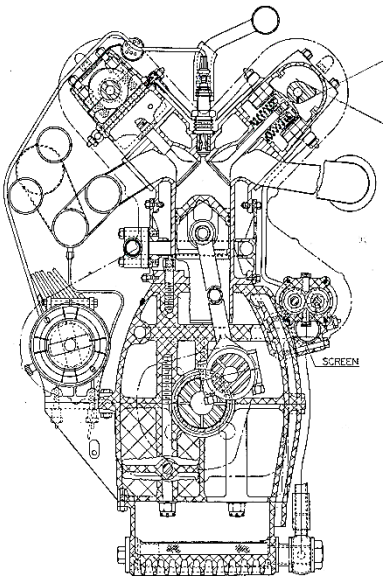

PP is as tested in 2000 on Methanol with fuel pipes enlarged (1143). Original power as supplied to USA for Wilbur Shaw to drive in the Indy 500 was 360 BHP (DASO 1229 & 949). Shaw, contrary to other statements, definitely raced on Methanol (905). Probably the engine could not have been run on petrol.
Shaw won the 1939 & 1940 500s and was leading comfortably at 76% distance in 1941 when a suspect wheel, fitted in error, collapsed

Fig.18A
PEP 448
1939 ERA E Type
IL6 2 15/32''/3 5/32'' = 0.782
[62.706 mm/80.169] = 1,486 cc
262 HP @ 7,500 RPM

Apologies for the distorted picture (caused by the regrettable printing of an illustration across two pages in Motor 18 December 1946), but otherwise it is so good that it seemed worth using it

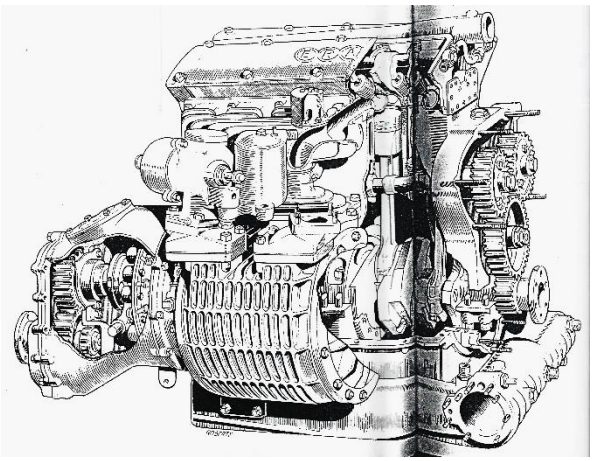

Figs. 18B & 18C

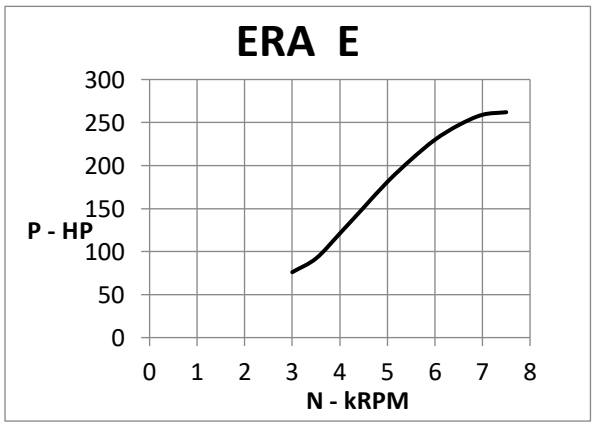

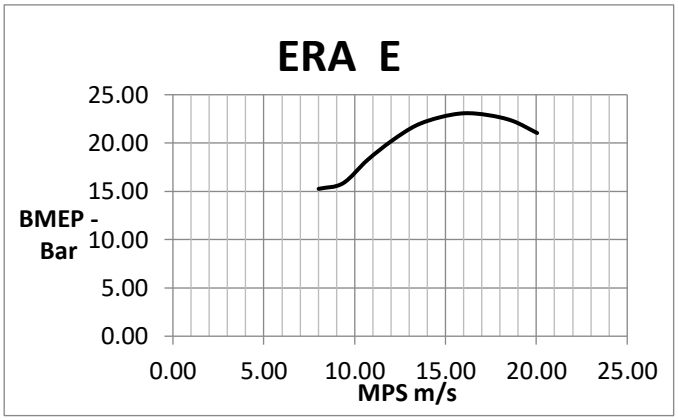

POWER CURVES

PEP	448
DASO	448
YEAR	1939
Make	ERA
Model	E
Vcc	1486
Ind. System	PC
Confign.	IL6
Bmm	62.706
Smm	80.169

N	P	MPS	BMEP
kRPM	HP	m/s	Bar
3	76	8.02	15.26
3.5	92	9.35	15.83
4	121	10.69	18.22
4.5	151	12.03	20.21
5	181	13.36	21.80
5.5	207	14.70	22.67
6	230	16.03	23.08
6.5	247	17.37	22.88
7	259	18.71	22.28
7.5	262	20.04	21.04

This curve was supplied to Rolls-Royce to assist in the estimation of the power of the BRM T15.

Fig. 19
PEP 278
1939 Auto Union D-type
60V12 65 mm/75 = 0.867 2,986
500 HP @ 7,500 RPM

This V12 engine had 3 overhead camshafts, with a single central shaft operating both rows of inlet valves.

blog.hemmings.com

The original 1938 version with single supercharger produced 420 HP.

Fig. 20A
PEP 159
1948 Gordini Type FB
IL4 78 mm/75 = 1.04 1,434 cc
84 HP @ 5,600 RPM

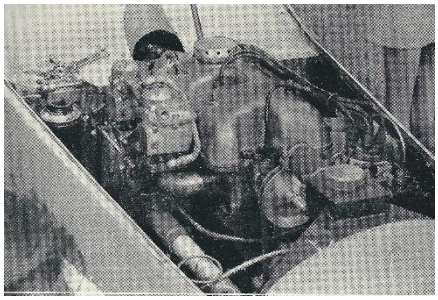

Fig. 20B

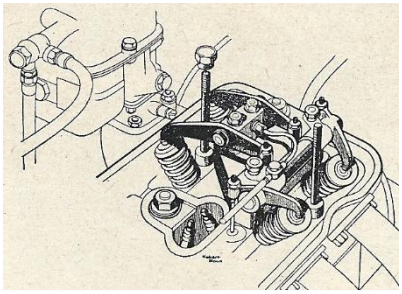

This shows how an inclined-valve cross flow cylinder head was adapted to the original vertically-valved push-rod system. The long inlet rockers were rather fragile and Amedée Gordini planned to fit a BMW system for 1949.

Fig. 20A DASO 779. Fig. 20B DASO 143.

POWER CURVES

PEP	159
DASO	143
YEAR	1948
Make	Gordini
Model	FB
Vcc	1,434
Ind. System	NA
Confign.	IL4
Bmm	78
Smm	75

N	P	MPS	BMEP
kRPM	HP	m/s	Bar
4	57.2	10.00	8.92
4.3	66.1	10.75	9.59
4.5	71	11.25	9.85
4.7	74.6	11.75	9.91
5	78.9	12.50	9.85
5.3	81.9	13.25	9.64
5.6	83.8	14.00	9.34

Powers as published were French CV and have been divided by 1.014 to convert to HP

Charts on P. 9

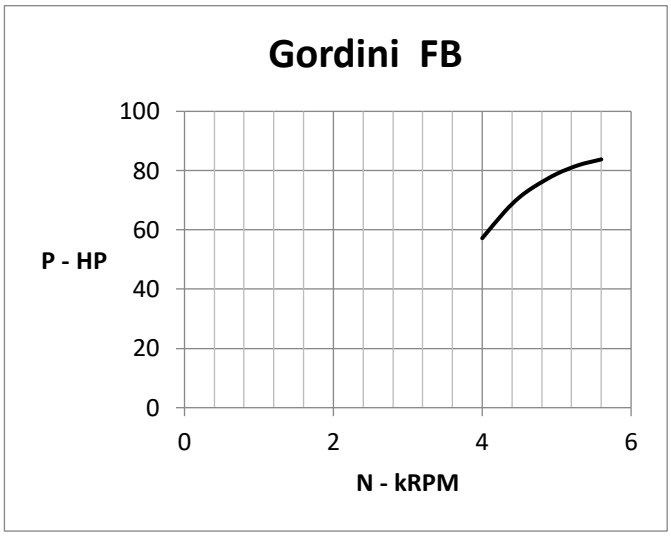

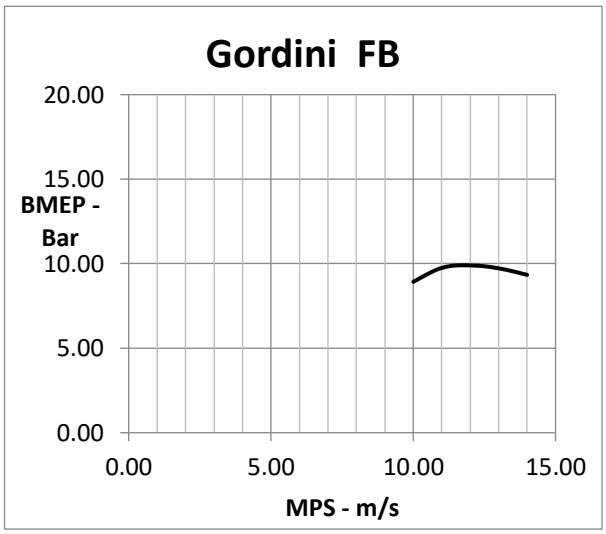

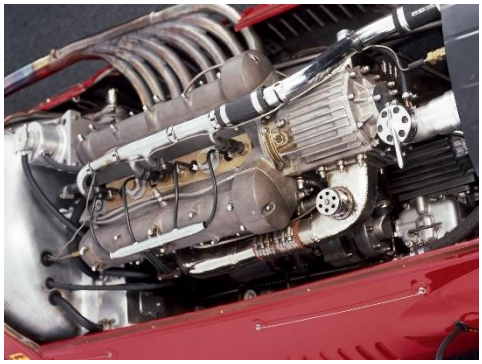

www.laberezina.com

Fig. 21
PEP -
1948 Maserati 4CLT/48
IL4 78 mm/78 = 1 1,491 cc
247 HP @ 7,000 RPM
The 2 Roots-type superchargers in series were mounted one above the other.
Also known as the "San Remo" type, after the 1948 race in which it first competed and won.

Fig. 22
PEP 438
1948 Lea-Francis US Midget
IL4 73 mm/100 = 0.73 1,674 cc (102.2 cid)
125 HP @ 6,000 RPM

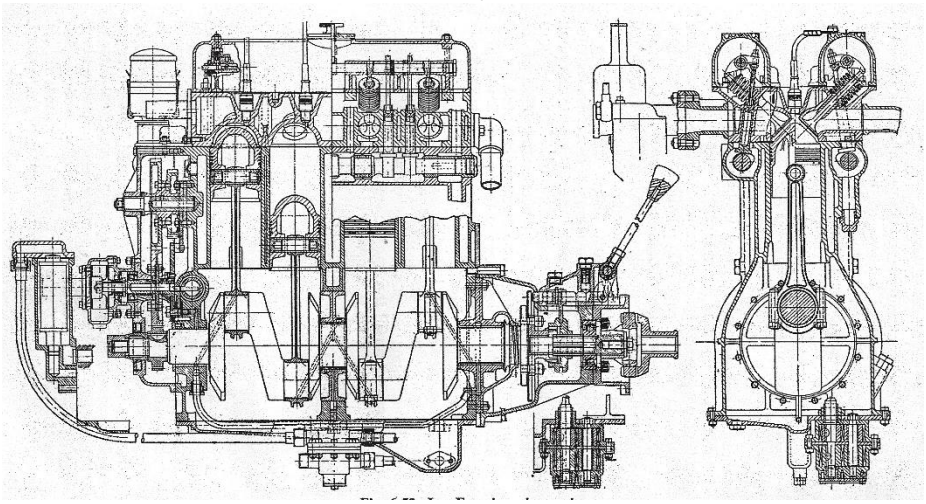

DASO 365

This engine was a reduced-bore and race-developed version of the production "14HP" (75 mm bore, 1,767 cc), built to the US Midget rule of 100 cid + 2.5% allowance ostensibly for rebores but immediately taken up. It was sold in small numbers against Its rival, the "Offy" Meyer-Drake Midget unit (see PEP 254 & Fig. 25). In 1950 Connaught Engineering bought the type with the original 1,767 cc capacity and an Al-alloy block as the basis of their prototype F2 car. For the Connaught A series in 1952 the bore was enlarged to 79 mm, 1,961 cc.

Fig. 23
PEP 48
1948 Lago Talbot T26C
IL6 93 mm/110 = 0.845 4,483 cc
240 HP @ 4,700 RPM

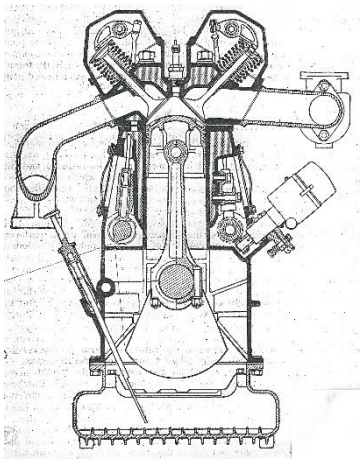

DASO 78

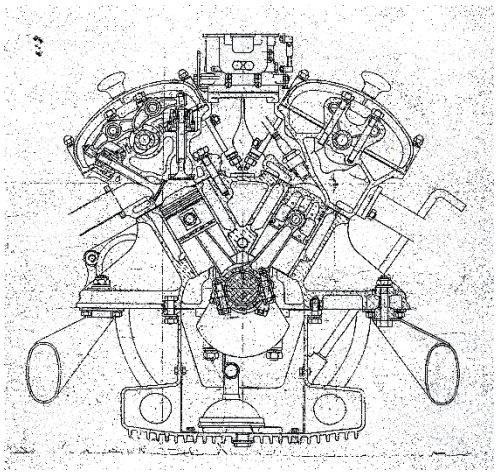

DASO 987

Fig. 24
1947 Ferrari 125
The original Gioachino Colombo NA engine representing
PEP 458
1949 Ferrari 125GPC
60V12 55 mm/52.5 = 1.048 1,497 cc
242 HP @ 7,750 RPM
Internal differences between the NA and PC engines are not known.

Fig. 25
PEP 254
1950 Offy Meyer-Drake Midget
IL4 3''/3 5/8'' = 0.828 102.5 cid
[76.2 mm/92.075] = 1,680 cc
132 HP @ 6,800 RPM

On 80 Octane petrol at R = 10 the engine produced 88 HP @ 6,000 RPM (DASO 126).

Wikipedia

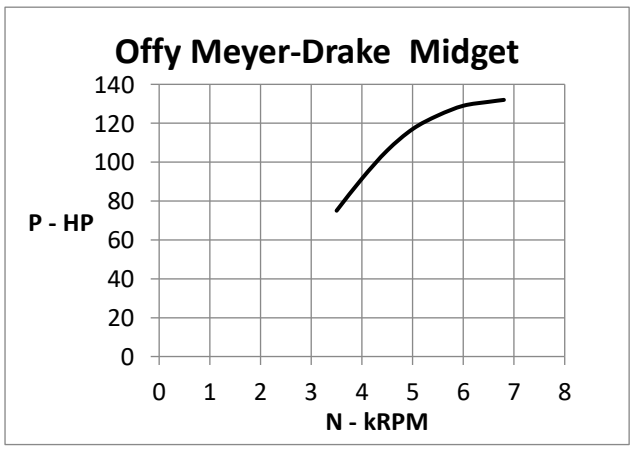

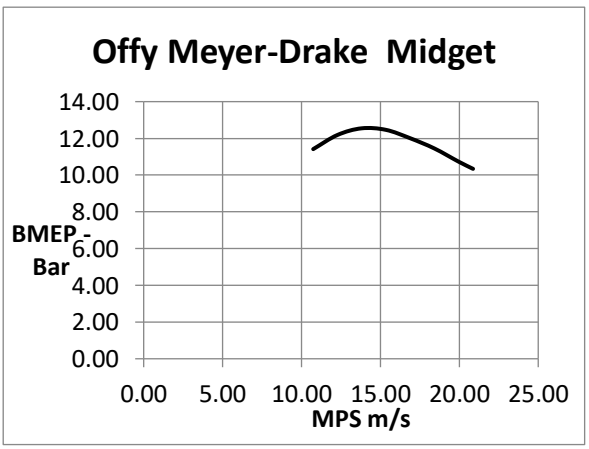

Power Curves data table on P. 11.

POWER CURVES

PEP	254
DASO	126
YEAR	1950
Make	Meyer-Drake
Model	Midget
Vcc	1680
Ind. System	NA
Confign.	IL4
Bmm	76.2
Smm	92.075

N	P	MPS	BMEP
kRPM	HP	m/s	Bar
3.5	75	10.74	11.41
4	91.5	12.28	12.18
4.5	106	13.81	12.55
5	117	15.35	12.46
5.5	124	16.88	12.01
6	129	18.42	11.45
6.5	131	19.95	10.74
6.8	132	20.87	10.34

Fig. 26
PEP 171
1953 Maserati F2 A6GCM (A6SSG)
IL6 76.5 mm/72 = 1.063 1,986 cc
197 HP @ 8,000 RPM

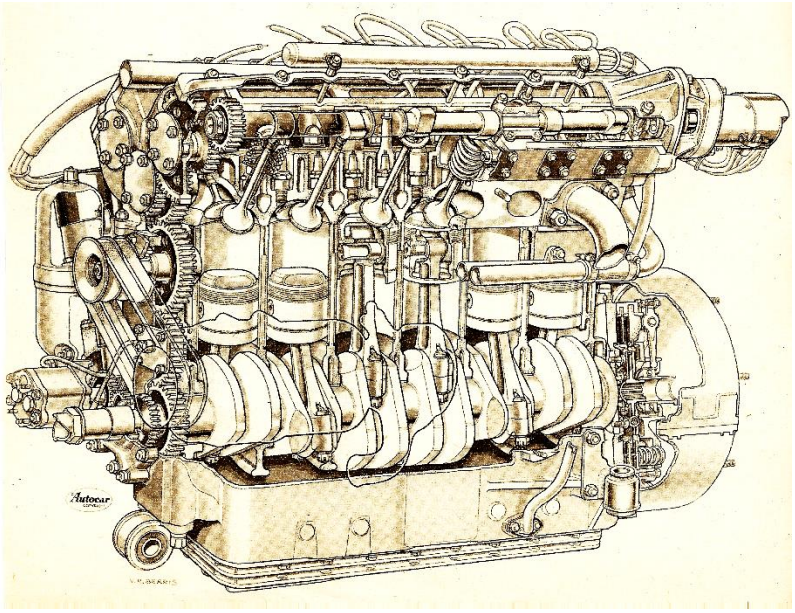

Fig. 26B

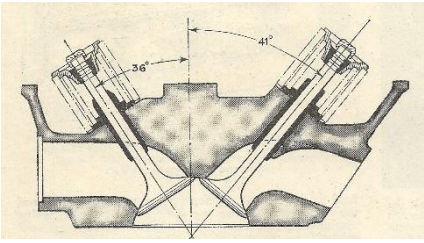

Both Figs. DASO 140

Fig. 27
PEP 370
1953 MG TD/Stage 5
IL$ 66.5 mm/90 = 0.739 1,250 cc
97 HP @ 6,000 RPM

The supercharger was a proprietary Shorrock vane-type

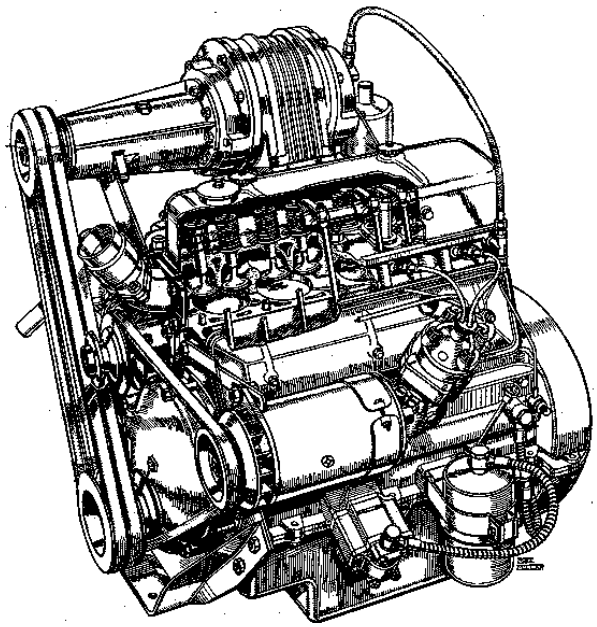

www.mg-cars.org.uk

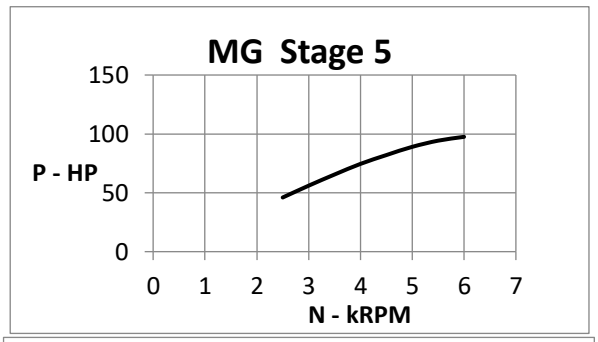

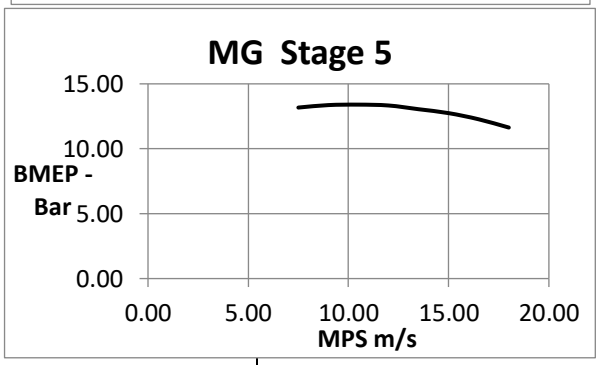

POWER CURVES

PEP	370
DASO	337
YEAR	1953
Make	MG
Model	TD/ St 5
Vcc	1250
Ind. System	PC
Confign.	IL4
Bmm	66.5
Smm	90

N	P	MPS	BMEP
kRPM	HP	m/s	Bar
2.5	46	7.50	13.17
3	56	9.00	13.36
3.5	65.5	10.50	13.40
4	74.5	12.00	13.33
4.5	82	13.50	13.05
5	89	15.00	12.74
5.5	94.25	16.50	12.27
6	97.5	18.00	11.63

Fig. 28
PEP268
1954 BRM T15 Mk II
135V16 1.95''/1.90'' = 1.026
[49.53 mm/48.26] = 1,488 cc
630 HP @ 12,000 RPM

Note the low-lift cams.

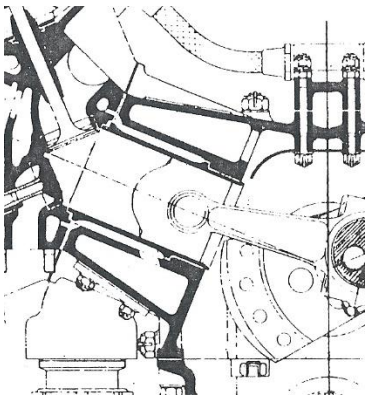

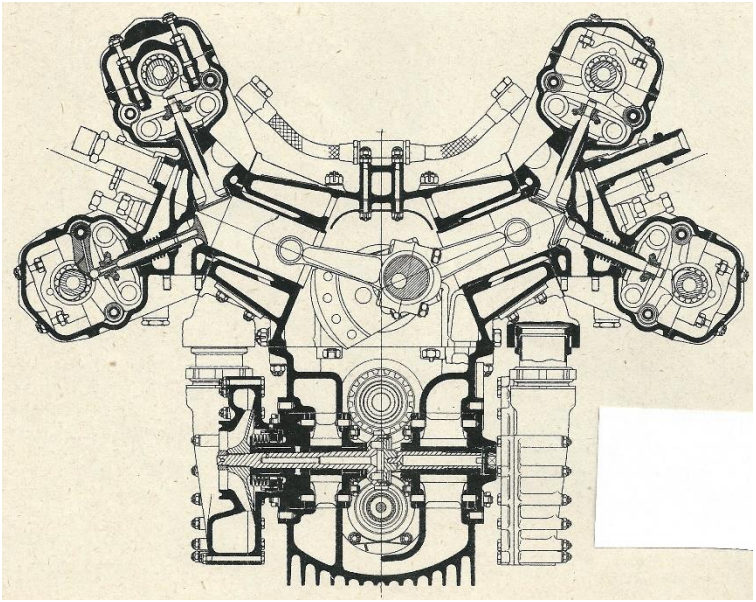

LH Fig. A. Rudd Oct 1990 RH Fig. DASO 647

Fig. 28B (LHS) showing more clearly how the cylinder liners were in compression, which was a cause of serious failures in early running (see Note 71B.)

POWER CURVES

PEP	268
DASO	40
YEAR	1954
Make	BRM
Model	T15/2
Vcc	1488
Ind. System	PC
Confign.	135V16
Bmm	49.53
Smm	48.26

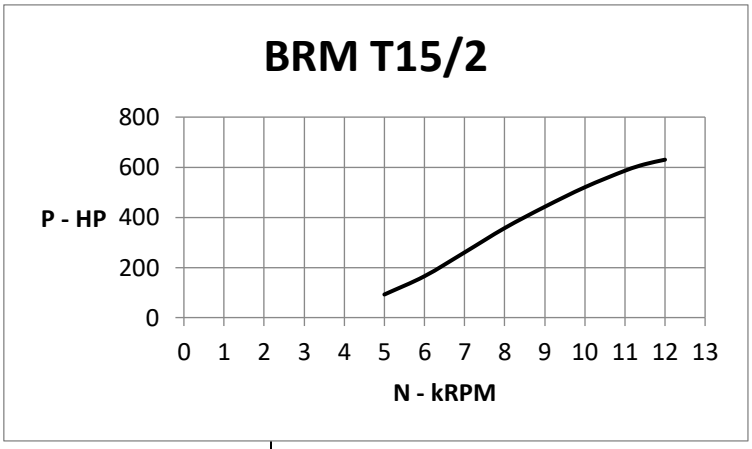

N	P	MPS	BMEP
kRPM	HP	m/s	Bar
5	92	8.04	11.07
6	165	9.65	16.54
7	260	11.26	22.34
8	357	12.87	26.84
9	442	14.48	29.54
10	520	16.09	31.27
11	586	17.70	32.04
11.5	612	18.50	32.01
12	630	19.30	31.57

Test on 22 Feb. 1953 terminated at 11,500 RPM by backfire caused by exhaust ingestion.
Engine ran to "Red Line" of 12,000 in car and power has been extrapolated to that RPM.

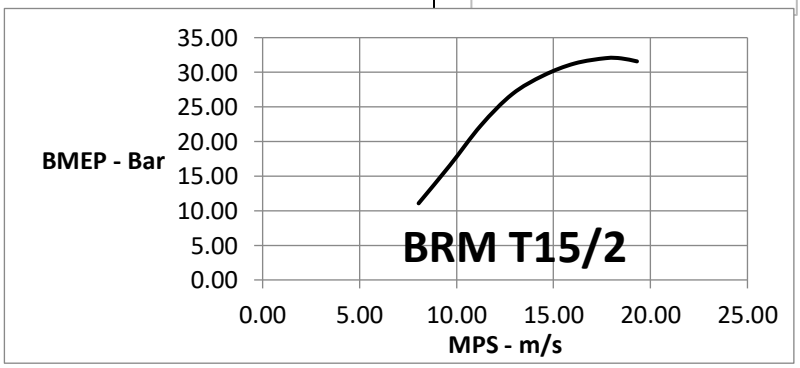

Fig. 29
1950 Bristol 85C
Automobile Engineer Feb. 1950

representing
PEP 407
1955 Bristol BS4a/2
IL6 66 mm/96 = 0.688 1,971 cc
155 HP @ 6,000 RPM

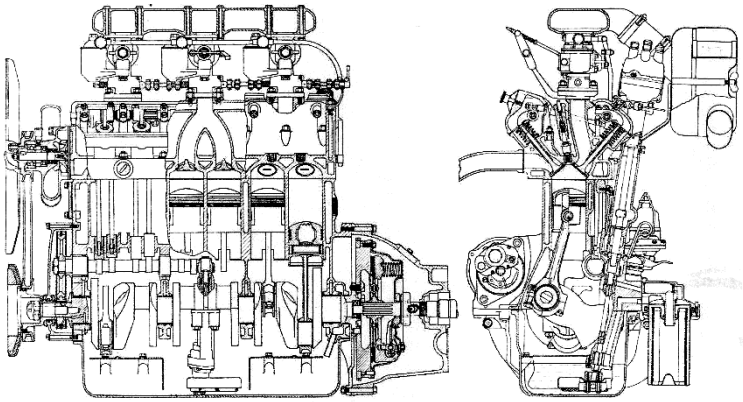

GENERAL ARRANGEMENT OF THE BRISTOL ENGINE.
Bore and stroke 66 mm. × 96 mm. Swept volume 1,971 c.c.

The BS1 in 1952 was probably the 1st UK engine to be raced with Nitro-Methane additive when Leslie Hawthorn used it in the Cooper driven by his son.

In 1954 for their Le Mans sports-racing cars Bristol produced a cylinder head with 6 inlet ports fed by 3 x Solex double-choke carburetters (BSX). One of these heads was supplied later to Bob Gerard for his front-engined Cooper. Subsequently Gerard also had an engine enlarged to 68.7 mm x 99.64 = 2,216 cc. Believed the final result gave around 170 HP.

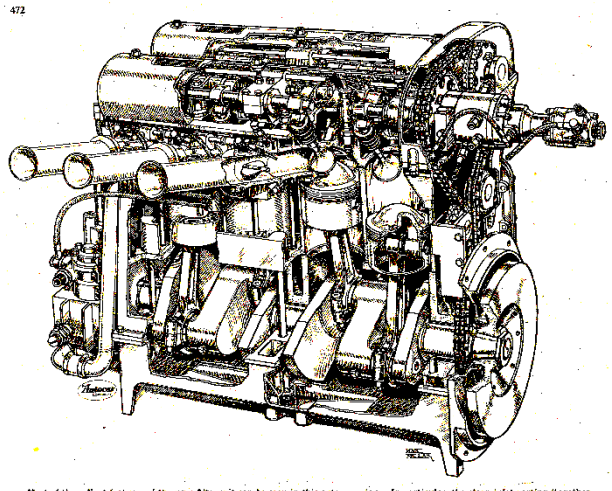

Most of the salient features of the new Alta unit can be seen in this cutaway view. In particular, the clean inlet porting (together

Fig. 30
1954 Alta GP
representing
PEP 463
1957 Connaught GP
IL4 93.5 mm/90 = 1.039 2,472 cc
255 HP @ 7,000 RPM

The 1954 Alta was drawn with port fuel injection but Connaught fitted Weber carburetters.
Figs. 30B & 30C below show the unusual through bolts and the 4-cylinders-combined iron block construction.

All Figs. DASO 140

Fig. 30B

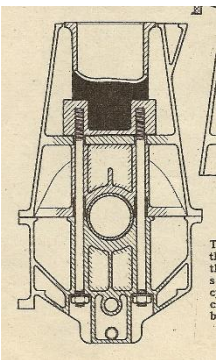

Fig. 30C