“Significant Other” (SO)

SO1 1889 Daimler Twin; SO5 1913 Peugeot C d l’A; SO8 1922 Vauxhall TT;
SO12 1938 Norton TT;
SO13 1939.5 Mercedes-Benz M165; SO16 1962 “Offy”; SO18 1965.5 Honda RC149;
SO19 1979 BMW M12/7; SO20 1992 Honda RA122E/B; SO24 1998 Ford Nascar.

A variety of racing engines which do not fall inside the definition chosen for “Grand Prix Car-of-the-Year” (CoY) has much of interest. A selection of 24 over the years 1889 to 1998 has been made under the heading of “Significant Other” (SO) and these engines are included on the Appendix 1 database.

A sample of illustrations follows, listed above, which have extended captions instead of full write-ups as for the CoY examples.

1966 Cosworth FVA

One of the most ”Significant Other” non-Grand Prix engines ever built was the 1966 Cosworth type FVA Formula 2 engine. It is not included in Appendix 1 because it is fully described and illustrated in “The Unique Cosworth Story”, linked to Note 79 which also shows its superiority to immediately-preceding engines.

“Significant Other” (SO) continued

The balance of “Significant Other” is now added. The following illustrations are interpolated into the first sample to make a complete chronological series.

SO2 1895 Panhard M2E; SO3 1908 Sizaire et Naudin C de l’A; SO4 1910 Peugeot VX5;
SO6 1920 Ballot Indianapolis; SO7 1922 Miller 183cid; SO9 1927 Miller-Lockhart 91cid;
SO10 1930 Rudge-Whitworth Senior TT; SO11 1935 Dixon-Riley 2L Special;
SO14 1950 Ferrari 375. This engine is described and illustrated in “1st Pressure-Charged Era” (1PC) Part II
SO15 1962 AJS 7R; SO17 1964.5 Ford Indy 4-cam; SO21 1995 Cosworth AC;
SO22 1995 Opel DTM/1; SO23 1995 Vauxhall BTCC; SO24 1998 Ford NASCAR.

Fig. SO1A
1889 Daimler 1st Twin
16V2 60mm/100 = 0.6 566 cc
1½ HP @ 600 RPM; ECOM = 33.9%
(*Italics* indicate figures are not certain)
This is the drawing of the engine as Patented by Gottlieb Daimler with valves in the pistons which were opened by stops at the end of the stroke to allow air compressed in the crankcase to assist in scavenging the exhaust.
Ref. (627) states that these valves were not fitted in the engines as built but (637) and (835) indicate otherwise. They may have been shown as an alteration necessary to avoid the Otto Patent.
Main inlet valves operated by suction.
Speed control by a centrifugal governor via a lever pushing the exhaust-operating rods out of contact with the valves.
Hot tube ignition not shown nor is the surface carburetter.
DASO 957 p.31.

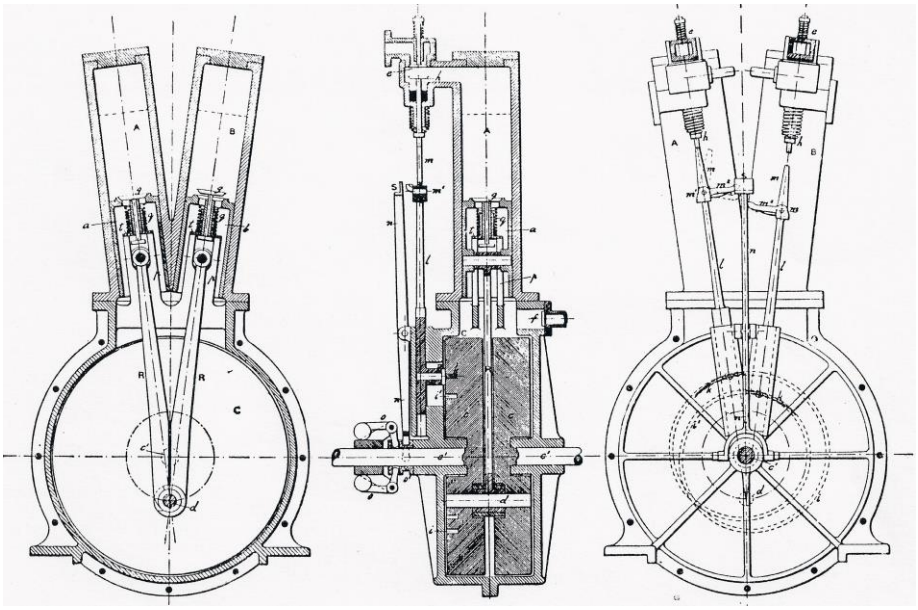

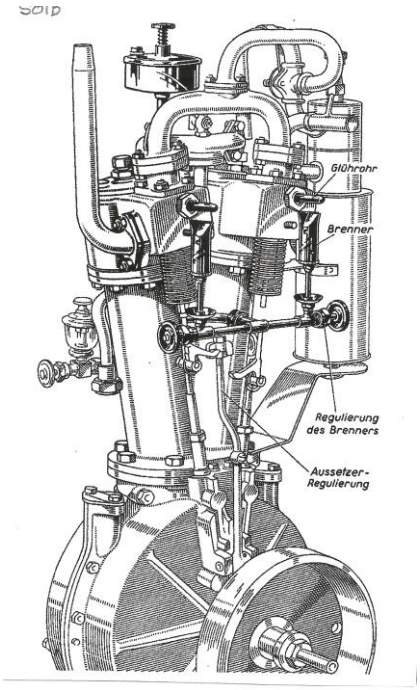

Fig. SO1B
This shows:-
the ignition system
(*Gluhrohr* = glow tube; *Brenner* = burner to maintain the temperature);
the exhaust valve control (*Aussetzer-Regulierung*);
and the cooling water jackets around the heads;
also the provision of oil feeds to the cylinder walls.
DASO 637

This basic type of engine, definitely without the scavenging valves, enlarged to 75mm/140 = 0.536, 1,237 cc and giving *about 3½ Hp @ 750 RPM*, powered the Peugeot driven by Lemaitre to be the 1st petrol-engined car to reach Rouen from Paris in 1894, the first motoring competition. The engine was licence-built by Panhard.

Fig. SO2A
1895 Panhard et Levassor M2E
IL2 80/120 = 0.667 1,206 cc
4 HP @ 800 RPM. ECOM = 29.3%.
Designed by Wilhelm Maybach.
Made by Panhard et Levassor under licence.
Named “Phénix. It powered the car with which Emile Levassor
was 1st finisher in the 1895 Paris-Bordeaux-Paris race.
Suction inlet valves. Governed by interruption of exhaust valve opening
(which could be over-ridden to reach peak revs),
Details of the hot-tube ignition shown. Float-feed carburetter.
Note the water-cooling jacket extending further down the cylinder.

DASO 622

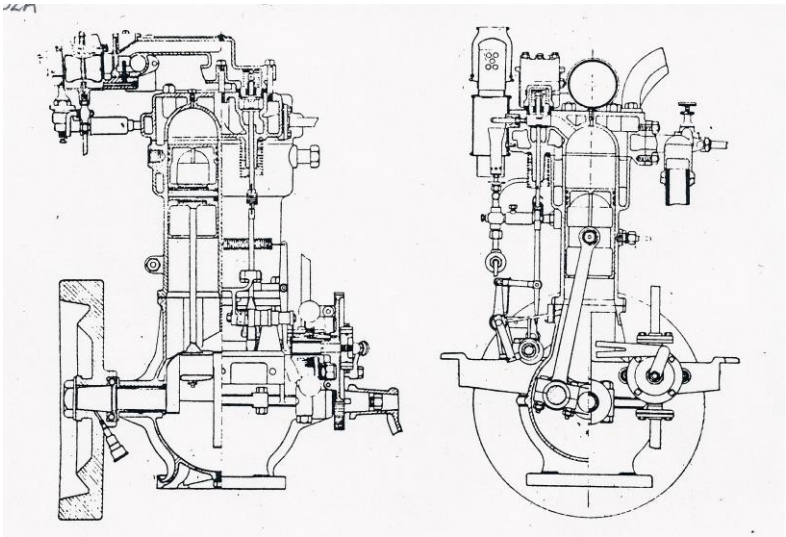

Credit RAeSoc

Fig. SO2B
Spritzendusen Vergaser = Spray-jet carburetter;
Fliekraft- Regler = Centrifugal Governor;
Kraftstoff = Fuel.

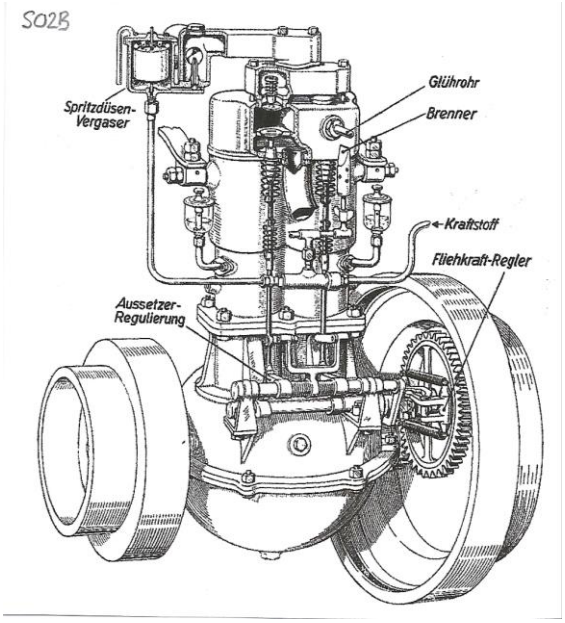

DASO 637

Fig. SO3A
1908 Sizaire et Naudin Coupe de L'Auto
1 cyl. water-cooled 100/250 = 0.4 1,964 cc
42 HP @ 2,400 RPM. ECOM = 44.2%.
Designed by Maurice Sizaire.
Tubular con-rod. Steel piston. Ball-bearing crank. 2 plugs per cylinder.
Push-rod Overhead inlet valve. Side exhaust valve.

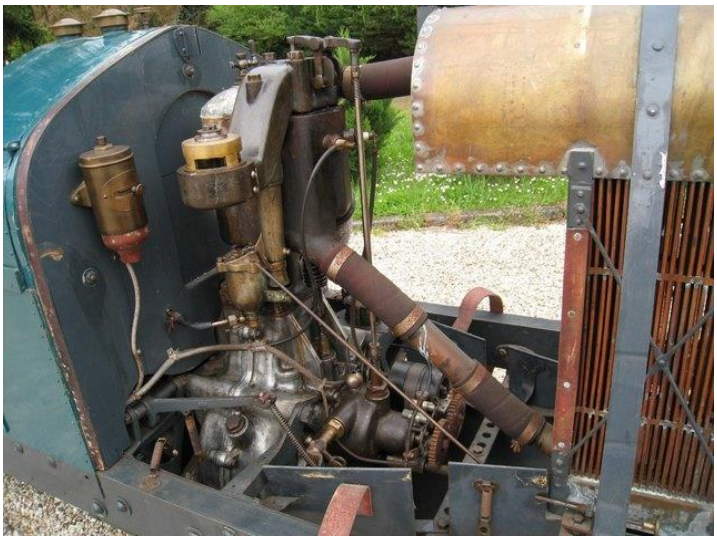

Fig. SO3B

Credits www.classicdriver.com

For further data see Appendix 1 and for a review of the significance of the Sizaire engine see Note 35 "The influence of Maurice Sizaire on piston engine design".

Fig. SO4A
1910 Peugeot VX5
16V2 80/280 = 0.286 2,815 cc
65 HP @ 2,200 RPM. *ECOM = 52.0%.*
Designed by Gratien Michaux.
Apparently 1 suction inlet valve and 2 horizontal exhaust valves per cylinder, driven by vertical shaft + rockers. One carburetter per cylinder.
This type, driven by Jules Goux, came 2nd in the 1910 Coupe des Voiturettes (aka Coupe de L'Auto) and made fastest lap.
Later in the year it covered 75 miles in one hour at Brooklands. It is not known what RPM this would have represented but probably below peak power at 2,200 RPM which was 20.5 m/s Mean Piston Speed.

DASO 4 Plate 34

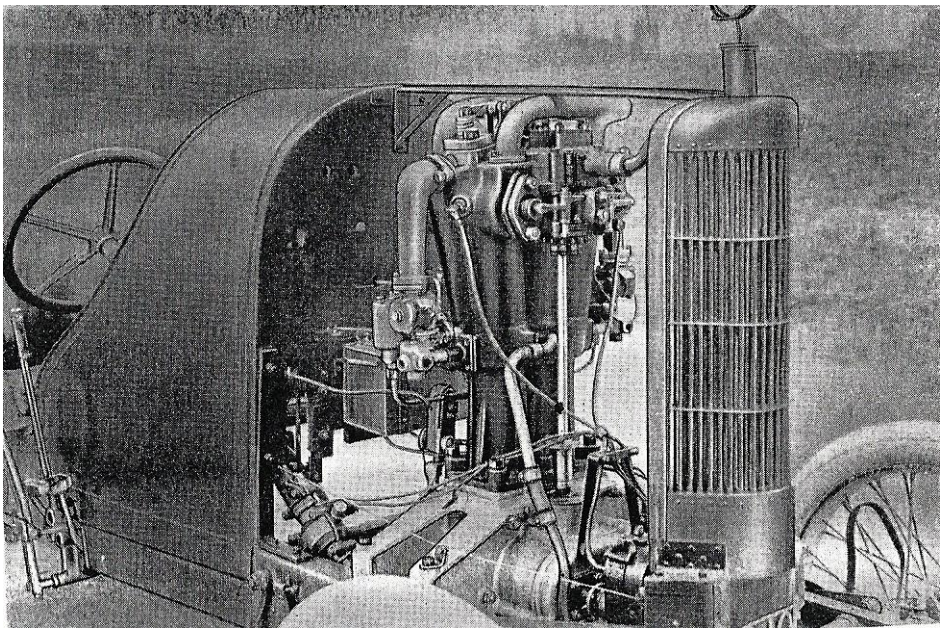

Fig.SO5A
1913 Peugeot L3/EX4
IL4 78/156 = 0.5 2,982 cc
90 HP @ 2,900 RPM; ECOM = 49.2%
Designed by Ernest Henri.
4 valves per cylinder at 60^0. The carburetter on this restored engine is not original.
The plate on the side of the integral head + cylinder block is not a repair but closed the open side of the iron casting.

DASO 711 p.147.

See the"1st Naturally-Aspirated Era (1NA)", Eg. 5, for a full description of the novel features of the 1913 Peugeots including Fig. 5B for a section of the top-end of the L3/EX4 engine

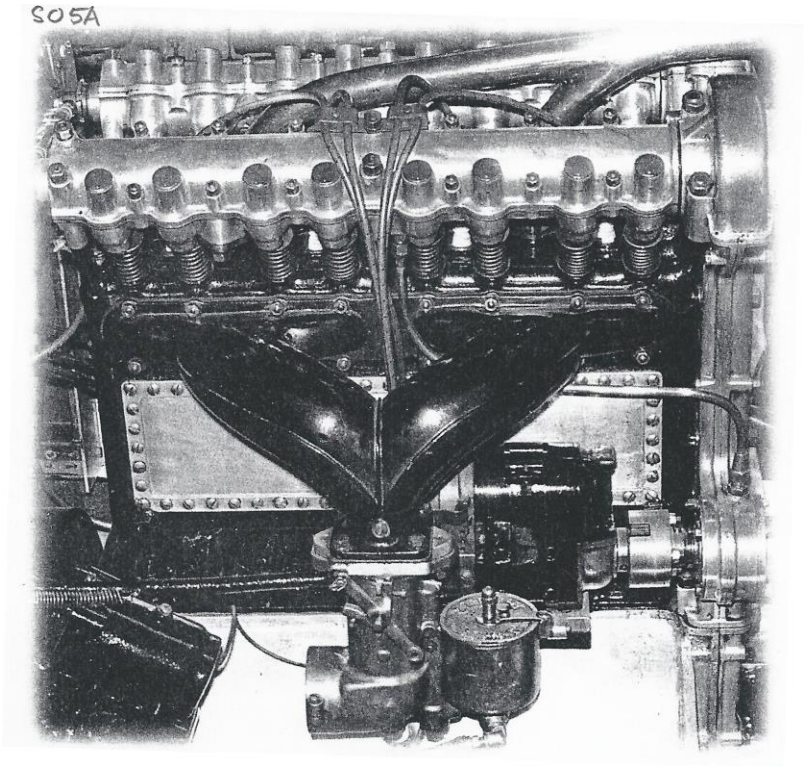

Apart from winning the 1913 3 Litre Coupe de l' Auto (aka "Coupe des Voiturettes") for which it was designed, an L3 driven by Arthur Duray came 2nd in the 1914 Indianapolis 500 mile race competing with cars up to 7.4 Litres. It was only 1.8% slower than the winning 6.2 Litre Delage.

It is well-known that Louis Coatalen of Sunbeam had an L3 copied surreptitiously (1086) as a basis for his 1914 TT and GP engines and that in WW1 he used Peugeot racing technology to build many types of aero engines.

What is less publicised is that Rolls-Royce bought an L3 in late 1913 and kept it until late 1914. However, Henry Royce did not accept the race-stressed Peugeot architecture as a suitable base for his own 1st aero engine which was designed after 4th August 1914 (1068).

For illustration of the 1913 Peugeot power a curve is attached for the 1914 Sunbeam TT. Apart from a 3.5 mm increase in bore for + 9.2% swept volume (3,255 cc) to suit the TT rules, the Sunbeam was a "Coatalen copy" of the Peugeot.

POWER CURVES

Eg.	For comparison with SO5			
DASO	24			
YEAR	1914			
Make	Sunbeam			
Model	TT			
Vcc	3255			
Ind. System	NA			
Confign.	IL4			
Bmm	81.5			
Smm	156			
	N	P	MPS	BMEP
	kRPM	HP	m/s	Bar
	1.6	40.5	8.32	6.96
Stipple	1.8	53	9.36	8.09
=Approx.	2	65	10.4	8.93
	2.2	73.5	11.44	9.18
	2.4	80.5	12.48	9.22
	2.6	86.5	13.52	9.15
	2.8	92.5	14.56	9.08
Extrapolated	2.88	95	14.98	9.07

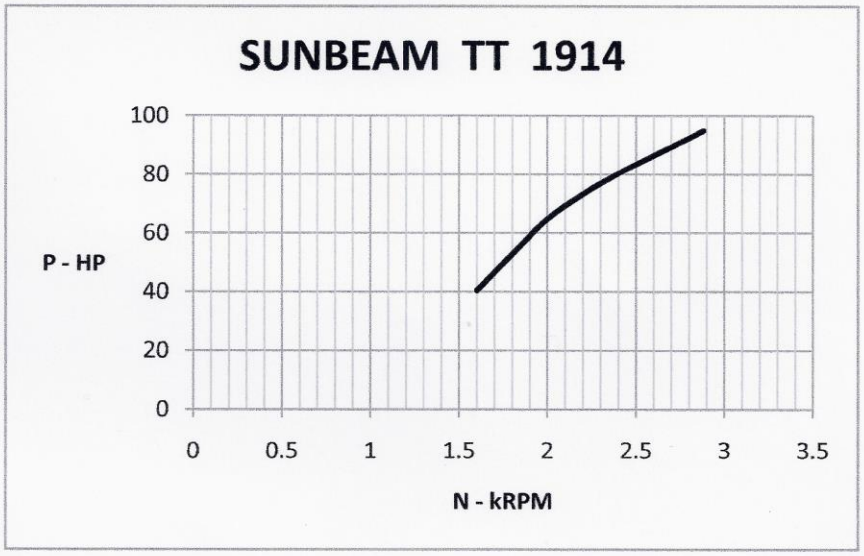

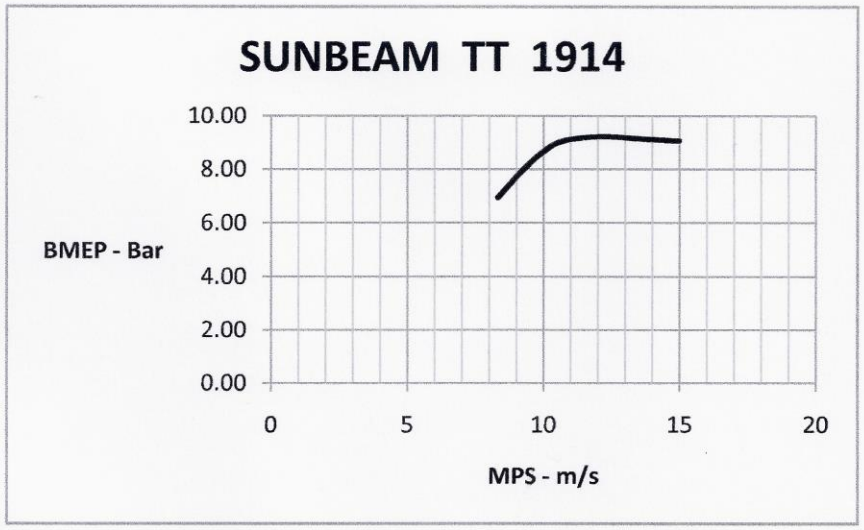

Fig. SO6A
1920 Ballot Indianapolis 500
IL8 65/112 = 0.58 2,973 cc
110 HP @ 3.800 RPM. ECOM = 43.3%.
Designed by Ernest Henri.
It included many features from his 1913 L3/EX4 Peugeot; Egs. 4v/c at 60^0;
4 radial bolts retaining each support diaphragm for the 3 intermediate crank main bearings;
plates closing the open sides of the integral head+block iron casting.
New features were:- inverted-cup tappets; and fully-enclosed valve gear.
Big-end bearings were fully-floating split plain bushes.
Note the nuts on the upper side of big-ends to allow assembly after insertion of the rods from above into the barrel crankcase.

DASO 26 p,.78

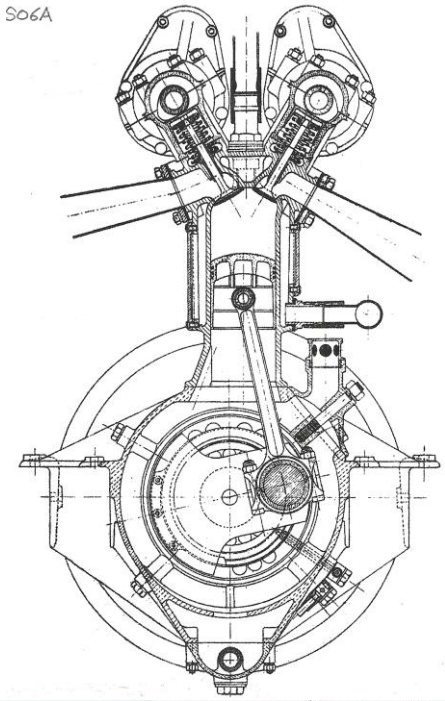

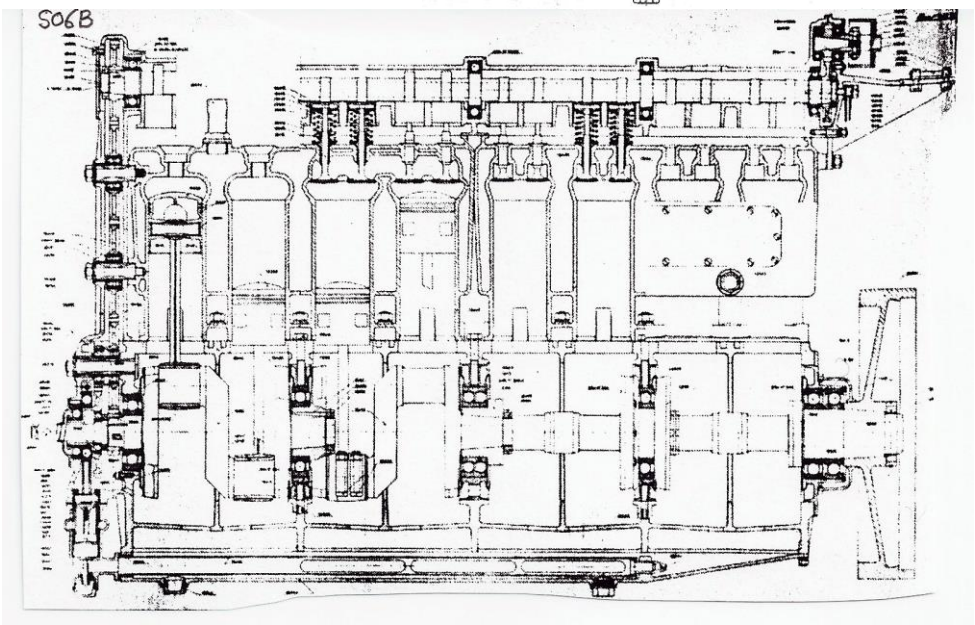

Fig.SO6B
Note the "Negative-Squish" combustion chambers needed to accommodate an inlet-valve area 55% of piston area. Also the taper-key-bolts used to join the separate crankshaft pieces needed to permit un-split intermediate main ball bearings (double-row at centre).

DASO 26 p.78

The racing history of this engine is given in "1st Naturally-Aspirated Era (1NA)" at P.13.

Fig. SO7A
1922 Miller 183
IL8 2 11/16''/4'' = 0.672 181.5 cubic inches displacement (cid)
(68.2625/101.6 2,975 cc)
125 HP @ 4,000 RPM. ECOM = 43.8%.
Designed by Leo Goossen, developed by Harry Miller.
The 1st racing engine to make intentional use of "ramming" in individual inlet tracts (see Note 27).
4 valves per cylinder at 50^0 . Dual-choke Miller carburettors.
Integral head+block with open sides to iron casting closed by plates
(an original1913 Henri Peugeot feature).
Note, only 3 main bearings. Tubular con-rods. All bearings white-metal. Slipper pistons.
Barrel crankcase with access apertures closed by plates.
Inverted-cup tappets, copied from Ballot.

DASO 6 p.206

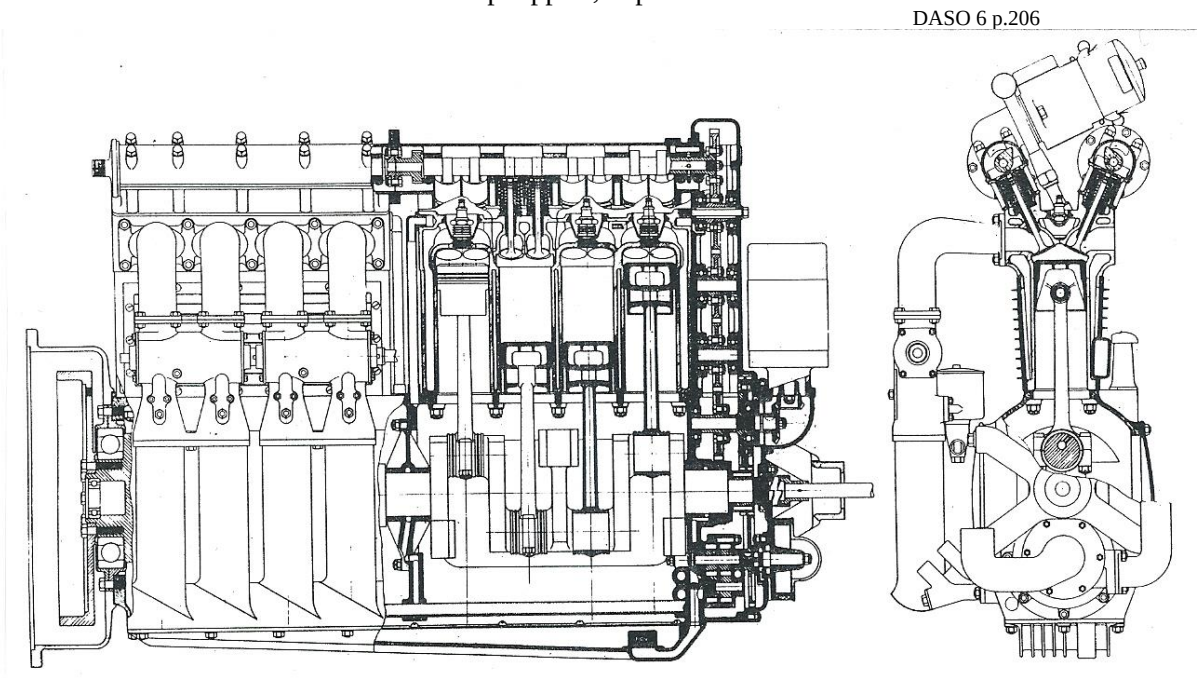

Although the Miller 183 engine powered the Duesenberg chassis of Jimmy Murphy's Special to win the 1922 "500", this was prior to the development of the 8-tube inlet system and had 4 single-choke carburettors (6).

Fig. SO8A
1922 Vauxhall-Ricardo Tourist Trophy (TT)
IL4 85/132 = 0.644 2,996 cc
126 HP @ 4,500 RPM; ECOM = 43.6%
Designed by Harry Ricardo
Al-alloy cylinder block with wet ferrous liners.
Separate bronze heads. 4v/c at 90^0.
Dual-choke carburetter drawing air from across the crankcase.
The DOHC valve gear is unusual in using both tappets and rockers.
The water pump delivers to the head.
Ricardo never published the valve timing of this engine but it achieved a peak power Mean Piston Speed of 19.8 m/s which must have required considerable overlap.

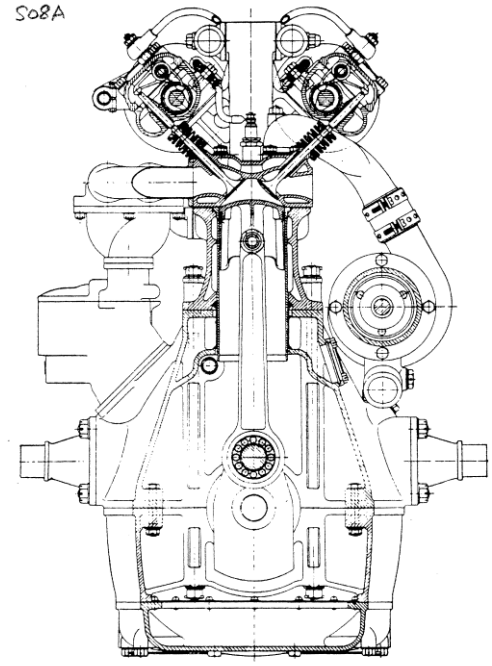

This is the only racing engine for which the values of the Volumetric Efficiency (EV) and Mechanical Efficiency (EM) have been measured and published (242).

DASO 972

Fig.SO8B
4 valves & 3 sparking plugs provision per cylinder (only centre plug used).
Ricardo slipper pistons.
All-ball-bearing crank journals, the mild-steel crank built up by shrinking.
Central flywheel to raise torsional vibration frequencies.

DASO 972

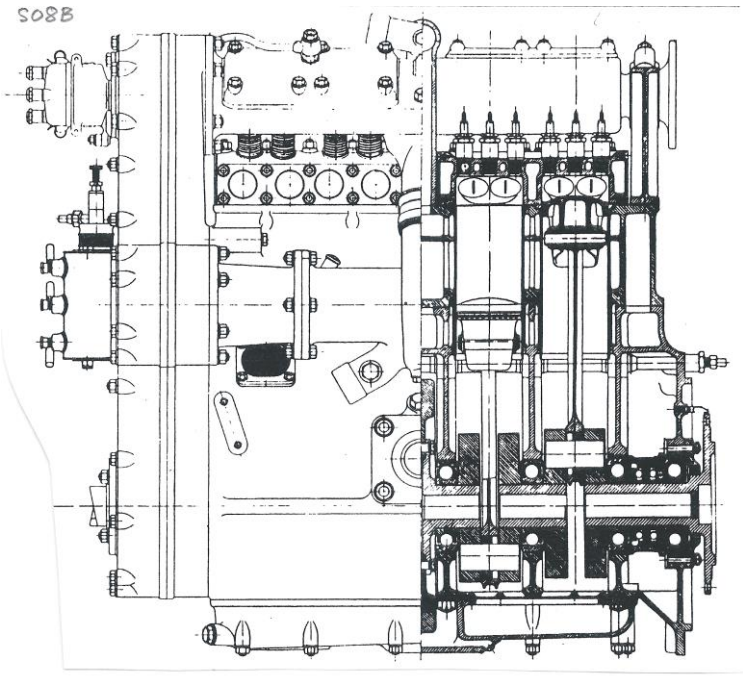

Three cars raced in the 1922 3 L TT on the Isle of Man cicuit. A 3rd place was achieved at 94.5% of the winning 8-cylinder Sunbeam's speed. The other 2 cars DNF with broken pistons. Although one engine had been bench-tested for the equivalent of 4,000 miles (4), this fault was only found just before the race*.

The RAC had chosen 3L for their race but GP rules had changed to 2L for 1922. Consequently the International career of the Vauxhall was ended after one race.

**Motor Sport* April 1969, reporting a 1923 *Automobile Engineer* article by Ricardo.

A Power Curve is given below.

POWER CURVES

Eg.	SO8	
DASO	242	
YEAR	1922	
Make	Vauxhall	Designed by H. Ricardo
Model	TT	
Vcc	2996	
Ind. System	NA	
Confign.	IL4	
Bmm	85	
Smm	132	

N	P	MPS	BMEP
kRPM	HP	m/s	Bar
1.5	43	6.6	8.56
2	61.5	8.8	9.18
2.5	79.5	11	9.50
3	96	13.2	9.56
3.5	109	15.4	9.30
4	120	17.6	8.96
4.5	126	19.8	8.36
4.75	125.5	20.9	7.89

Powers as published were at NTP and have been multiplied by 0.974 to adjust to STP.

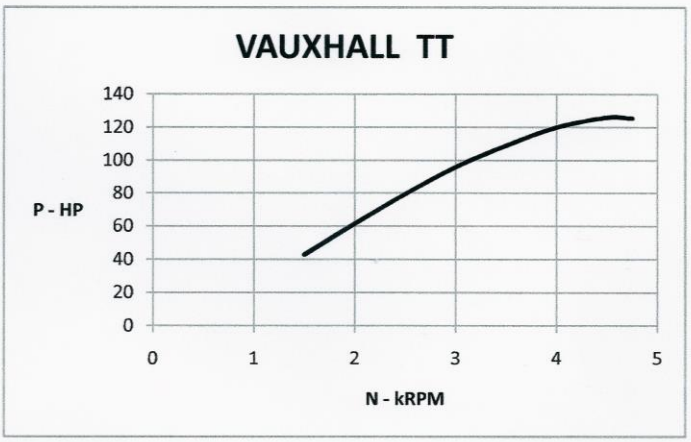

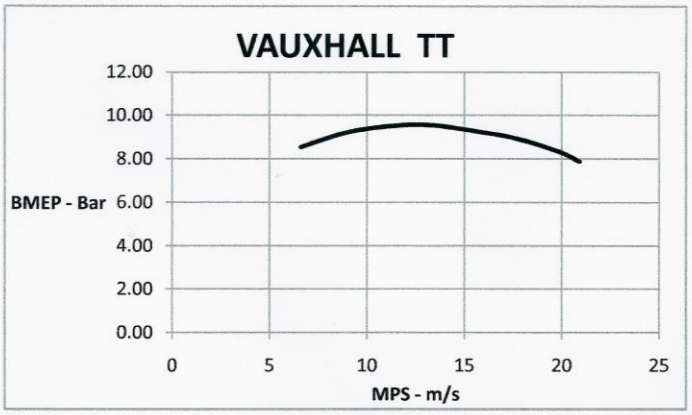

Subsequent history.

The Vauxhalls were raced in English events post the 1922 TT. In 1925 Amherst Villiers fitted a Murray Jamieson-designed Roots supercharger to one engine. This was used later by Raymond Mays and took the Shelsley -Walsh hill-climb record twice, after much modification and a broken crank on one occasion at 5,500 RPM. With a single-stage blower producing 28 psi boost* (2.9 ATA), intercooled and burning 60% methanol-based fuel, an ultimate power of nearly 300 HP @ 6,000 RPM (MPS = 26.4 m/s) was claimed in 1933 (446).

*Evidence of Frank Stark, who worked with Villiers and Jamieson (RRHT audio tape No. 51/1971).

Fig. SO9A
1927 Miller-Lockhart 91
IL8 2 3/16''/3'' = 0.729 90.2 cid
(55.5625/76.2 1,478 cc)
285 HP @ 8,100 RPM on Methanol. ECOM = 41.7%.
Designed by Leo Goossen and developed by Frank Lockhart and Jean Marcenac.
Most features similar to the Miller 183, but only 2 valves per cylinder at 94^0.
The valve timing given in Appendix 1 is Goossen's for the standard 91 (6) and it is highly probable that Lockhart's engine had revised cams with extended durations and much more overlap (1046).
DASO 6 p.213

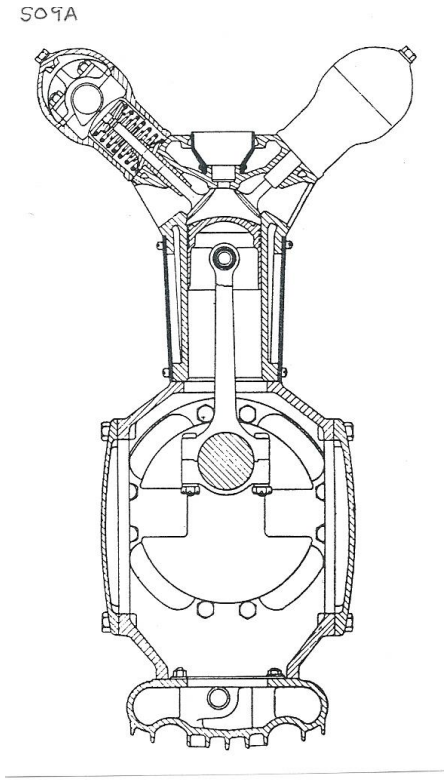

The centrifugal supercharger and intercooler are not shown.

With this engine Lockhart achieved a 2-way average of 160 MPH at Lake Muroc in 1927 with an un-streamlined single-seater.

The "Stutz Black Hawk" (6)

In 1927 Frank Lockhart decided to attempt the Land Speed record, using for power two of the tuned Miller 91s (3L) mounted on a common crankcase at 35^0 included angle and geared together at the rear (U16). Zenos Weisel did the detailed design and also the chassis. This had a minimised frontal area body and the wheels were enclosed in spats. He invented ice cooling to eliminate cooling drag. Scale model wind tunnel tests led to a prediction of over 280 MPH. The car was named for a major sponsor.

When the car arrived at Daytona Beach in early 1928 the LSR stood at nearly 207 MPH and was bettered shortly to just over that speed by Ray Keech's triple-Liberty-powered car.

The first Stutz trials in poor conditions were terminated when it crashed into the sea and Lockhart was lucky to escape alive. Rebuilt and back at the beach a preliminary run saw 198 MPH but a full-throttle run ended in disaster from a cut tyre and Lockhart's death.

In 1940 at Indianapolis, under the 3L PC/4.5L NA rules, the resurrected U16 powered Bob Swanson's Sampson Special to 6th place but the next year the car DNF at 44% distance.

Fig. SO10A
1930 Rudge-Whitworth Senior TT
1 a/c 85/88 = 0.966 499 cc
34.2 HP @ 5,900 RPM. ECOM = 50%
Designed by George Hack
Push-rod-and-rocker operated 4 valves per cylinder in a pent-roof chamber.
(In 1931 the exhaust valves were disposed radially to improve air-cooling of the head.)
Dry sump lubrication.

DASO 965

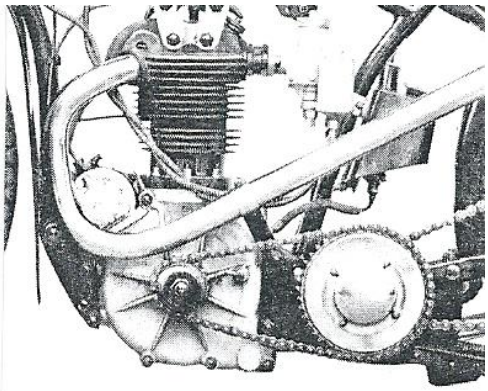

This is the Speedway version, with upswept exhausts.

Fig. SO10B

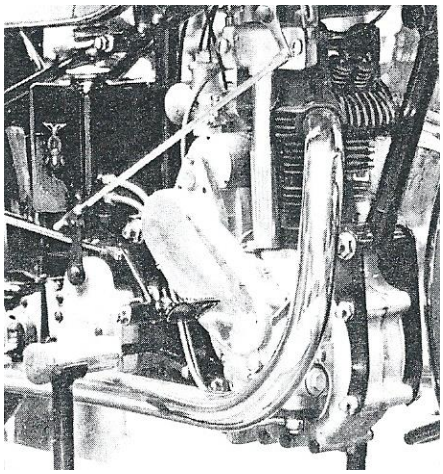

This is a Python, the engine sold for fitting in other makers' frames, in this case an Eysink.

Walter Handley won the 1930 Senior TT with the Rudge and made the 1st sub-30 minute lap of the Isle of Man Mountain circuit in 29 min.41 sec. = 76 28 MPH.

A Power Curve is given on the next page.

POWER CURVES

Eg.	SO10
DASO	12
YEAR	1930
Make	Rudge
Model	TT
Vcc	499.4
Ind. System	NA
Confign.	1 a.c.
Bmm	85
Smm	88

N	P	MPS	BMEP
kRPM	HP	m/s	Bar
4	25.6	11.73	11.47
4.4	28.4	12.91	11.57
4.6	29.8	13.49	11.61
4.8	30.7	14.08	11.46
5	31.6	14.67	11.32
5.2	32.7	15.25	11.27
5.4	33.4	15.84	11.08
5.6	33.8	16.43	10.82
5.8	34.1	17.01	10.53
5.9	34.2	17.31	10.39
6	34.1	17.60	10.18

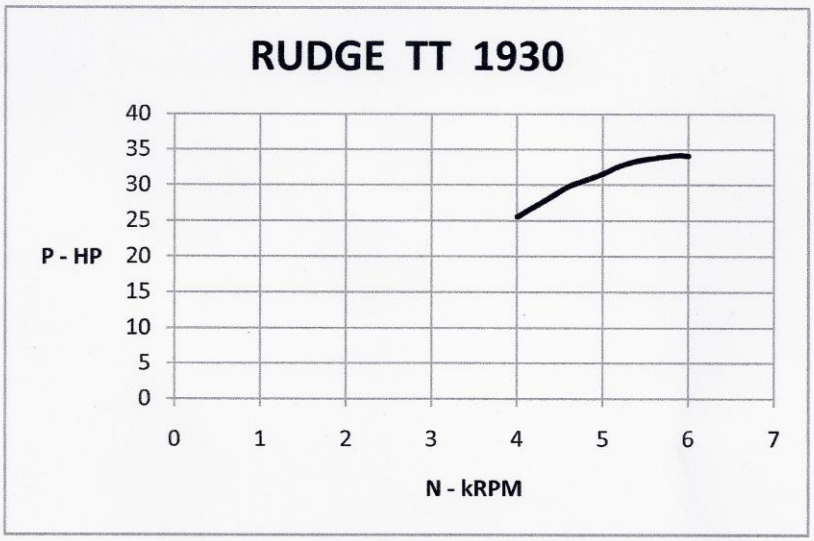

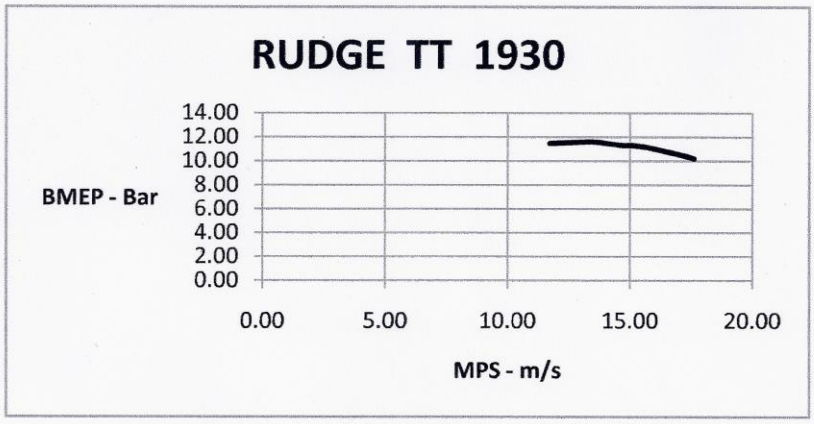

Fig. SO11A
1926 Riley 9 HP
IL4 2 3/8''/3 3/4'' = 0.633 1,089 cc
(60.325/95.25)
Designed by Percy Riley
DASO 154
Representing in section
1935 Dixon-Riley 2L Special
IL6 2.5''/104.5 mm = 0.608 1,986 cc
(63.5 mm)
150 HP @ 6.000 RPM on 90% Methanol + 10% Toluene fuel. ECOM = *43.1%.*
As Freddy Dixon had no dynamometer the estimate of *150 HP* @ 6,000 RPM was derived by a later experienced driver from the car's Brooklands performance and comparisons with contemporary cars (141).
Freddy Dixon's engine probably had a counter-weighted crank.
Inlets with 2 x 3-choke SU carburettors (141). See SO11B.

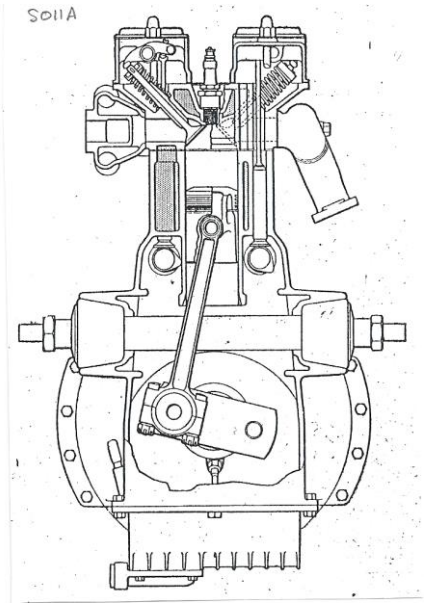

Dixon's 2L Riley Special lapped the Brooklands Outer Circuit at 134.4 MPH in 1935 (for comparison the all-time 2L record was set by Glenda Stewart in a *supercharged* 1.7L Derby-Miller at 135.95 MPH that same year).

Dixon won the BRDC 500-mile race in 1934 with a 1.8L version (645) and he won the same race again in 1936, Charles Martin co-driving.

Fig.SO11B
This shows the Dixon arrangement of 2 groups of SU carburettors, each cast as one body (141).
The picture is actually a Sports-Racing 1.5L Riley MPH engine prepared by Dixon (as recreated).
This type finished 2nd and 3rd in the Overall Classification at Le Mans in 1934.
DASO 1087

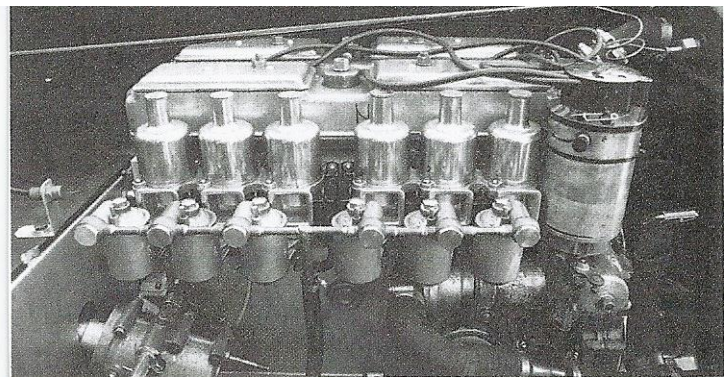

It is surprising that a tuner as good as Dixon did not fit entry bells to the carburetters and placed the float chambers where they obstructed the inflow.

Fig. SO12A
1938 Norton Senior TT
1 a/c 82/94.3 = 0.87 498 cc
49 HP @ 6,750 RPM; ECOM = 55.6%
Modified by Joe Craig from a SOHC redesign in 1930 by Arthur Carroll.
1938 was the 1st year that a DOHC engine was raced by Norton in the TT, having been built in 1937 but not raced there. The cam side thrust was taken by small-diameter tappets.
Exposed hairpin valve springs (HVRS).
Al-alloy cylinder head with a bronze "skull" to provide valve seats. The fins were extended to reach the airflow outside the wake from the front mudguard.
Megaphone exhaust (an *essential* super-tuning aid) not shown. From the exhaust port throat to the megaphone exit there was a 1 ; 8 expansion ratio, the final cone having a 13^0 included angle for an area ratio of 7.4 (12, 759).

The 1938 TT Norton was the 1st NA engine not on exotic fuel (which was 50% petrol/50% Benzole) for which "*100 HP per litre*" was publicised, although a little short.
It began a series of developments by Craig of increasing B/S ratio, from79.62/100 = 0.796 in the 1937 SOHC unit to 90/78.4 = 1.148 in 1954. After that Norton full-scale works racing finished.
DASO 968

Harold Daniell won the 1938 Senior TT with this engine with a record last lap at 91.0 MPH.

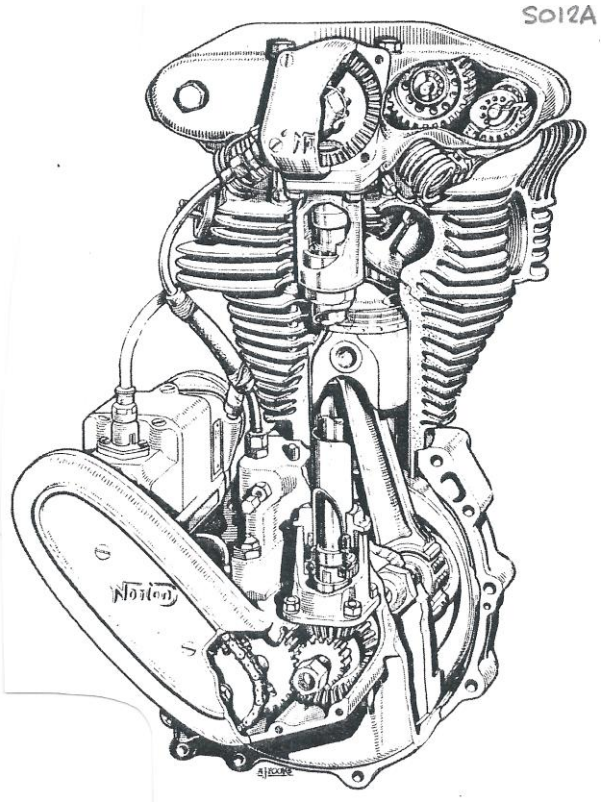

A Power Curve is given on the next page.

An illustration of the 1951 Senior TT Norton, developed from this engine, is given at A4-10 in the section "Grand Prix Motorcycle Engine Development, 1949 – 2008" at P.A4.
P.A3 includes an action shot of Harold Daniell winning the 1938 Senior TT.

POWER CURVES

Eg.	SO12
DASO	12B
YEAR	1938
Make	Norton
Model	TT
Vcc	498
Ind. System	NA
Confign.	1 a.c.
Bmm	82
Smm	94.3

N	P	MPS	BMEP
kRPM	HP	m/s	Bar
4	30	12.57	13.48
4.5	34	14.15	13.58
5	38	15.72	13.66
5.5	42.5	17.29	13.89
6	46.8	18.86	14.02
6.5	48.3	20.43	13.35
6.75	49	21.22	13.04

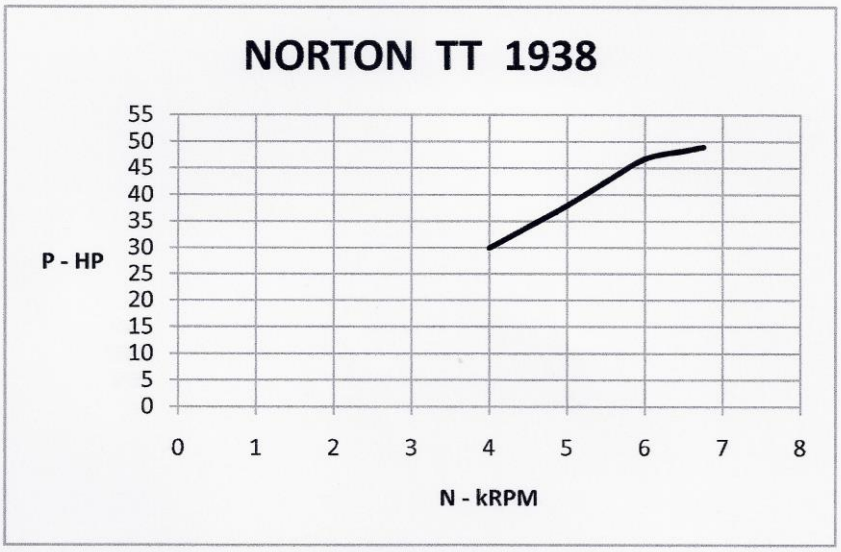

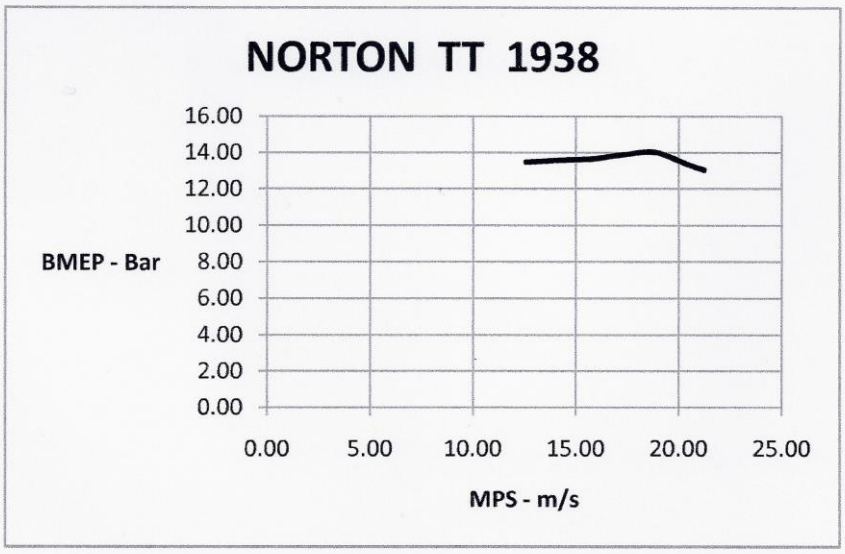

Fig. SO13A
1939 Mercedes-Benz M165
90V8 64/58 = 1.103 1,493 cc
Designed by Fritz Nallinger and Albert Heess. Development Rudolf Uhlenhaut.
The details of this engine's construction were "standard Mercedes" as described in Eg. 24
(see 1st Pressure-Charged Era (1PC) Part I).
There appears to be one difference from previous designs – the valve springs have fewer and thicker coils than Fig. 24A, which was an early M154 drawing.
As it was raced at Tripoli in May 1939 to take 1st and 2nd places it was 1-stage supercharged and delivered 243 HP @ 7,500 RPM on Methanol-base fuel.
Later a 2-stage supercharging system was bench-tested to give
274 HP @ 8,250 Rpm; ECOM = 37.8%.
That development work was in anticipation of the 1941 Grand Prix rules restricting Pressure-Charged engines to 1.5 Litres – but the war which Germany started terminated racing

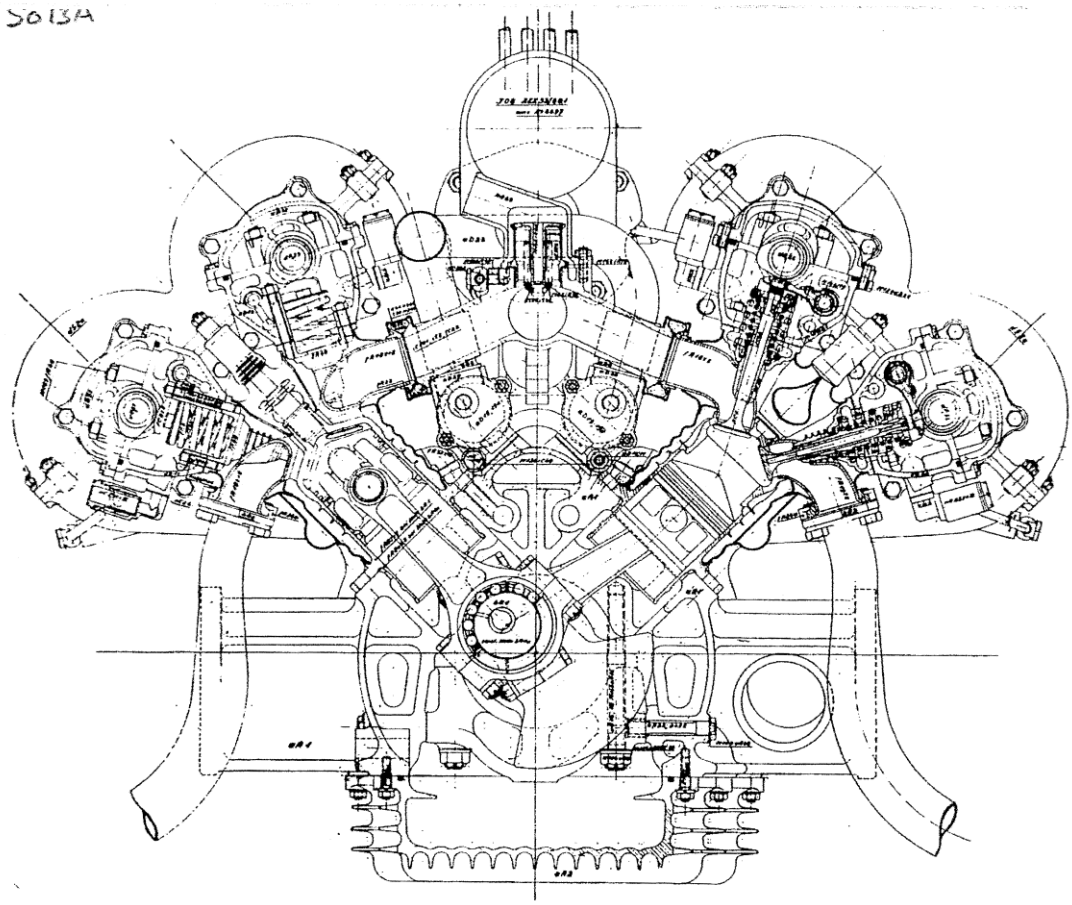

DASO 468 p.256.

Later history

The W165 cars were taken to Switzerland during WW2, then seized by the Swiss Government and had to be bought back by the local Mercedes-Benz agents in late 1950. The firm decided to build new cars of the type in June 1951 to compete in, what they hoped would be, an extended Formula of 1.5L PC/4.5L NA. Observing the performances of Alfa Romeo 1.5L PC versus Ferrari 4.5L NA later, it was realised the W165 would not be competitive. The final blow in October 1951 was that the formula to come in to racing in 1954 was to be 750cc PC/ 2.5L NA. Although one of the old M165 engines was tested to reach original performance in late 1951, the cars were consigned eventually to the company museum, one being demonstrated occasionally (468). The firm then designed the 2.5L NA M196 (see 2nd Naturally-Aspirated Era (2NA) Part 1

A Power Curve is given on the next page.

POWER CURVES

Eg.	SO13
DASO	468
YEAR	1939
Make	Mercedes
Model	M165
Vcc	1493
Ind. System	MSC
Confign.	90V8
Bmm	64
Smm	58

2-Stage Supercharged, post-Tripoli development.

N	P	MPS	BMEP
kRPM	HP	m/s	Bar
4	124	7.73	18.58
5	169	9.67	20.26
6	212	11.60	21.18
7	248	13.53	21.23
7.5	262	14.50	20.94
7.75	267	14.98	20.65
8.25	274	15.95	19.91

Powers as published were German PS and have been divided by 1.014 to convert to HP.

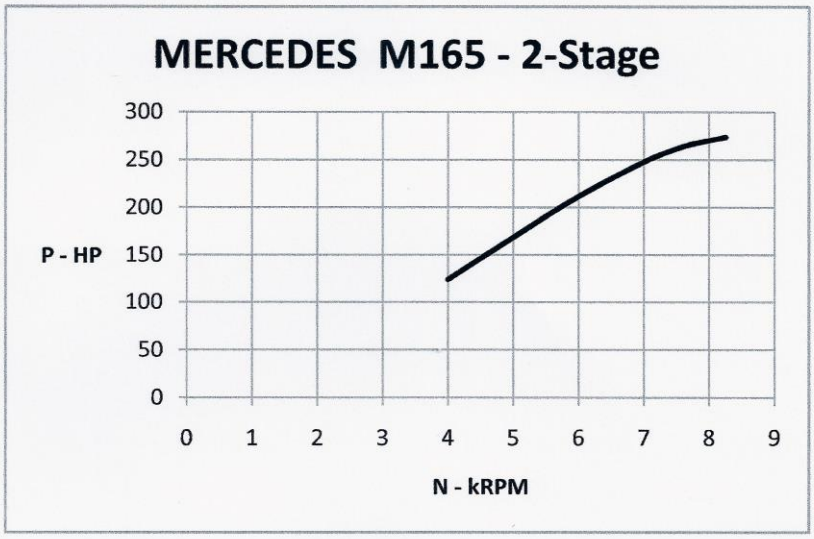

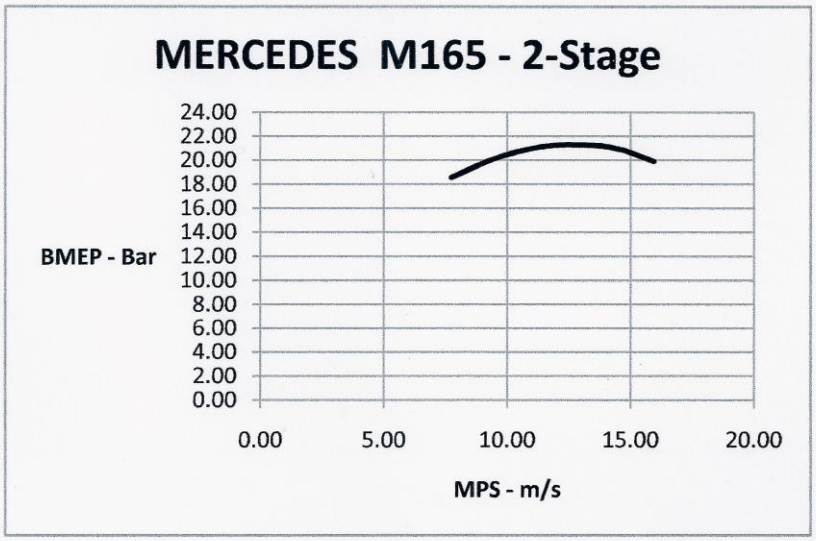

SO14
1950 Ferrari 375
This engine is described and illustrated in
1st Pressure-Charged Era (1PC) Part II, PP 8 – 11
as being the NA engine which brought that era to an end.

Fig. SO15A
1960 Matchless G50
1 a/c 90/78 = 1.154 496 cc

Representing
1962 AJS 7R
1 a/c 75.5/78 = 0.968 349 cc
42 HP @ 7.800 RPM. ECOM = 57.4%.
Designed by Phil Walker, developed by Jack Williams.
The G50 was developed from the 1959 AJS 7R by increased Bore and valves but otherwise the construction was the same. Matchless and AJS were by then marketing names for Associated Motorcycle (AMC) products.
The hairpin valve springs were enclosed and oil-cooled, unlike contemporary Nortons.
The essential megaphone exhaust is not shown. On the 1957 model 7R the megaphone had a 1 : 9 area ratio with a 12^0 cone angle. It terminated in a short reverse-cone exit about 40% smaller than the diffusing cone. This type of exhaust was introduced by Moto Guzzi in 1950 and was claimed to broaden the useful RPM range.
Although by 1962 Norton Motors were also owned by AMC, no common dynamometer tests of the two 350 cc racing motorcycles sold by the branches (SOHC 7R versus DOHC "Manx") were ever permitted. Norton employees begged leave to doubt the AJS power claims; the last time a British machine won the Junior TT, in 1961, it was Phil Read's Norton – but Mike Hailwood on a 7R was leading comfortably when his gudgeon pin broke 14 miles from the end! So, "You paid your money and you made your choice!".

DASO 967 p.467

In 1953 the 7R was 13% cheaper than the more-complex Norton. Later price data is not known.

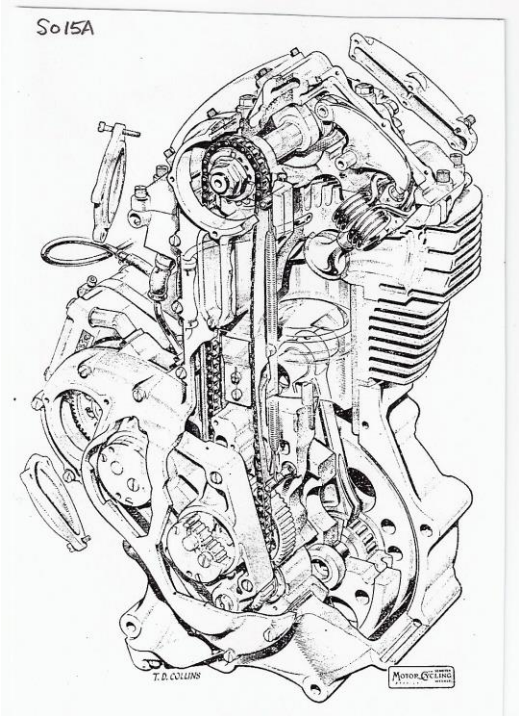

A 7R Power Curve is given on the next page.

POWER CURVES

Eg.	SO15
DASO	13
YEAR	1962
Make	AJS
Model	7R
Vcc	349
Ind. System	NA
Confign.	1 a.c.
Bmm	75.5
Smm	78

N	P	MPS	BMEP
kRPM	HP	m/s	Bar
6.5	37.75	16.9	14.89
7	40	18.2	14.65
7.2	40.7	18.72	14.49
7.4	41.3	19.24	14.31
7.6	41.6	19.76	14.03
7.8	41.7	20.28	13.71

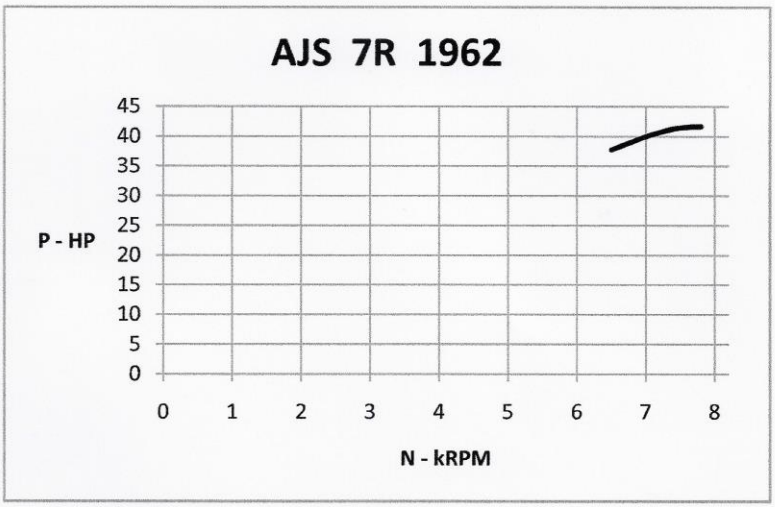

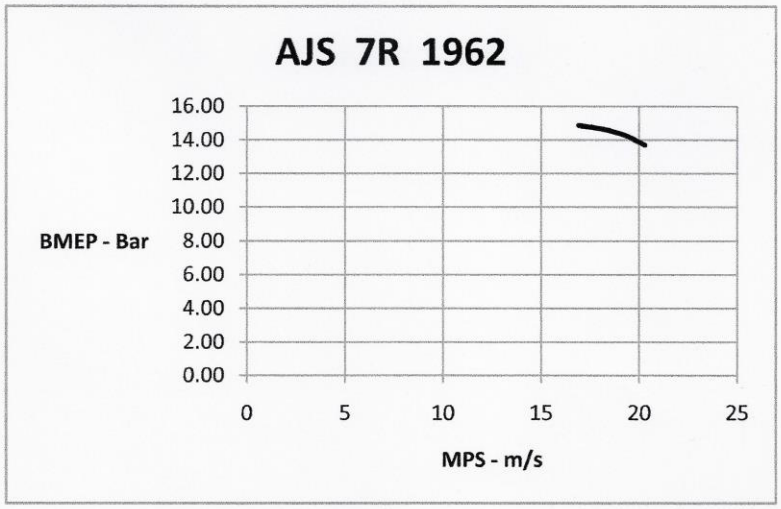

If the reverse cone megaphone end increased the RPM range, a plain “mega” engine would have had a very poor range indeed!

Fig. SO16A

1962 Offenhauser/ Meyer-Drake 252 cid

IL4 4 9/32''/4 3/8'' = 0.979 251.9 cubic inches

(108.74375mm/111.125) (4,128 cc)

400 HP @ 6,700 rpm on Methanol; ECOM = 46.5%.

Designed by Leo Goossen, *the* American racing engine designer, for Harry Miller in 1932 originally at 220 cid.

Produced by Fred Offenhauser, former chief machinist with Miller, with ex-Miller plant after Miller's bankruptcy in 1933.

Much developed by the makers subsequently, including after Lou Meyer and Dale Drake bought the plant from Offenhauser in 1946.

This figure is the post-1959 "Low gear tower" version.

Note the squish plateaux in the head, which were included in the original 220.

Integral cast-nickel-iron head + block, an open-sided casting closed by plates (a feature of the 1913 Peugeot engine which provided much technology to Miller in late 1914 from a rebuild job).

Al-alloy barrel crankcase (also like the 1913 Peugeot).

Tubular con-rods.

Hilborn constant-flow port fuel injection system is not shown.

DASO 960 p.1083

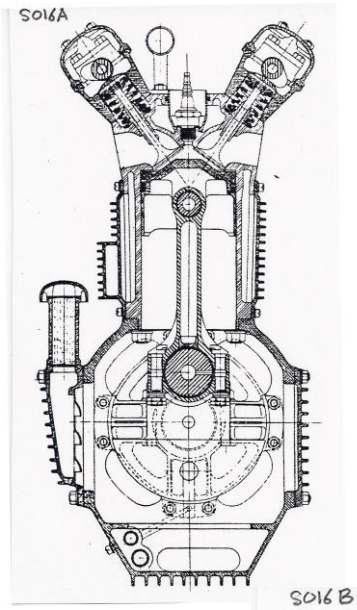

Fig. SO16B

Note the cast-bronze main bearing-support diaphragms, which are split to receive the plain bearings. They are cross-shaped, inserted into the crankcase assembled on the crank at 45^0 then rotated to pick up the case lugs. Rods are inserted from above and access to all bolts and nuts is via case apertures then closed by side plates.

DASO 960 p.1084

NB! These sections have distortions of dimensions in reproduction.

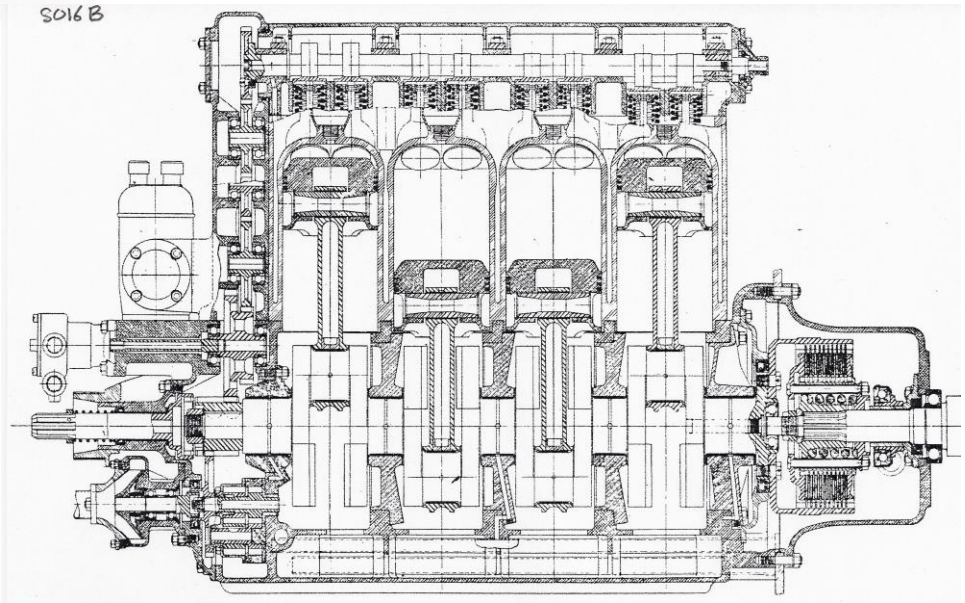

The success of the Offy

The 220 powered 2nd places at the Indy 500 in both 1932 and 1933. It achieved its first 1st place in the 1934 event. Over 27 racing years at Indianapolis the engine, 1934 to 1964 inclusive as developed in various sizes, powered 24 winners, 89% of the possible. It was beaten 3 times:- twice by an IL8 3L PC Maserati (1938 and 1939), once by an IL6 3L PC Thorne (1946).

The largest size of the Offy was made after Indianapolis adopted in 1938 the then-new Grand Prix formula of 3L PC/4.5L NA, when it was enlarged to 270 cid (4,428 cc). Specifically, an original Bore of 4 1/16" became 4 5/16" and a Stroke of 4 1/4" became 4 5/8" for nearly +23% of displacement.

In 1957 rules dictated a reduction of 6.4% for both engine classes and the Offy came down to 252 cid, as illustrated here.

It was defeated finally in 1965 by a combination of a mid-engined Lotus chassis and the new Ford "Four Cam" 90V8 255 cid NA., driven by Jimmy Clark.

POWER CURVES

Eg.	SO16
DASO	10
YEAR	1962
Make	Offy M.D.
Model	252 cid
Vcc	4128
Ind. System	NA
Confign.	IL4
Bmm	108.74 (4 9/32")
Smm	111.13 (4 3/8")

N kRPM	P HP	MPS m/s	BMEP Bar
4.5	290	16.67	13.97
5	328	18.52	14.22
5.4	353	20.00	14.17
6	385	22.23	13.91
6.25	393	23.15	13.63
6.5	398	24.08	13.27
6.7	400	24.82	12.94
7	396	25.93	12.26

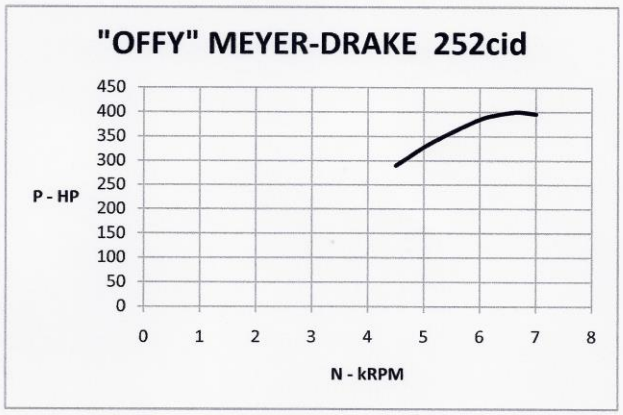

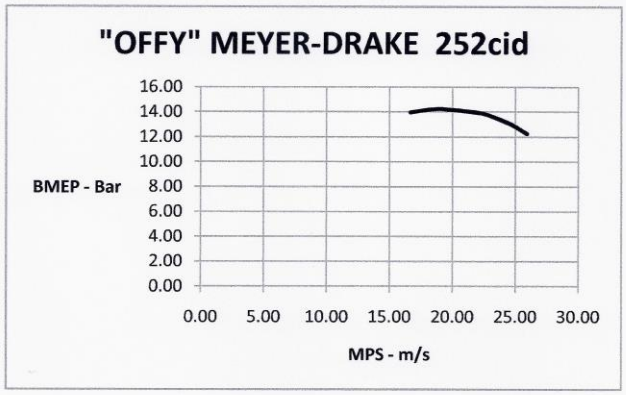

Fig. SO17A
1964.5 Ford Indy 4-Cam
90V8 3.76''/2 7/8'' = 1.308 255.4 cid
(95.504 mm/73.025 4,185 cc)
495 HP @ 8.600 RPM on Methanol. ECOM = 45.5%
Based on a "Fairlane" production block/crankcase recast in Al-alloy (54).
DOHC, 4 v/c combustion chambers influenced by "Offy" design but with downdraught inlet ports to permit in-Vee exhausts to facilitate coupling.

DASO 938

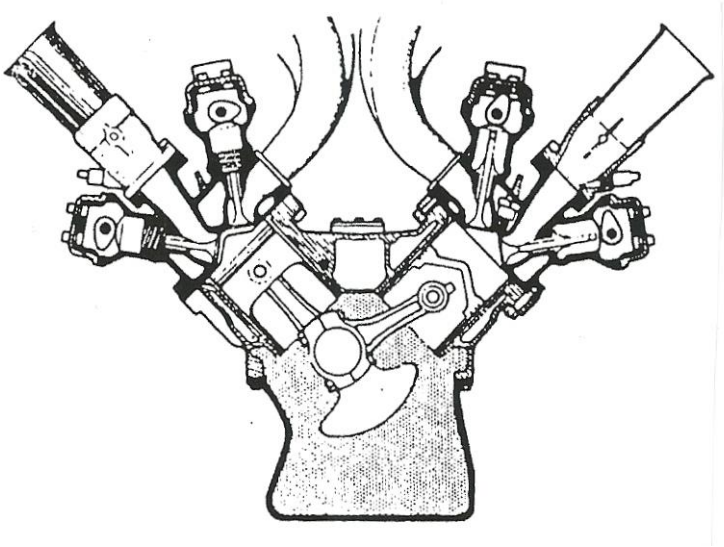

Fig. SO17B
This shows the cross-coupled exhaust system which was arranged easily with the in-Vee ports, the crank being of the "1932 Ford V8 2-plane" layout giving no vibration. Tests had shown that this exhaust system was the best of 6 configurations tried (55).

DASO 970

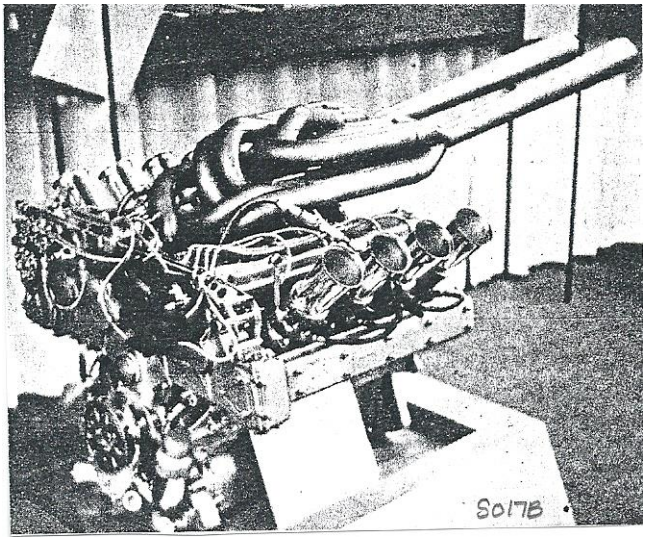

Racing history

The Indy "4-cam" appeared at Indianapolis in 1964 and powered Rodger Ward to 2nd place in a Watson-built mid-engined car. It first powered a 500 winner in 1965 in Jimmy Clark's Lotus 38, the first mid-engined car to win the event. It repeated that success in 1966 and 1967.

In 1968 the engine was de-stroked to the optional 2.8L for PC and TurboCharged. This version powered 3 more Indy wins (1969, 1970 and 1971) and a further win in 1977 when reduced to the 2.65L PC rule. A 1964 4.2L Power Curve is given on the next page.

POWER CURVES

Eg.		For comparison with Eg.SO17
DASO	55	
YEAR	1964	
Make	Ford	
Model	"4 Cam"	
Vcc	4185	
Ind. System	NA	
Confign.	90V8	
Bmm	95.504	(3.76")
Smm	73.025	(2 3/8")

N	P	MPS	BMEP
kRPM	HP	m/s	Bar
4	190	9.74	10.16
5	270	12.17	11.55
6	387	14.61	13.79
6.5	424	15.82	13.95
6.7	435	16.31	13.88
7.8	477	18.99	13.08
8	476	19.47	12.72

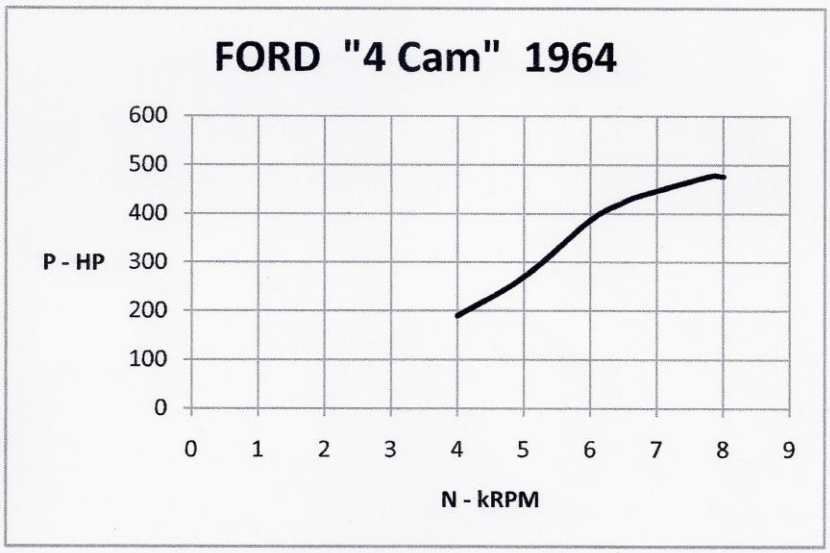

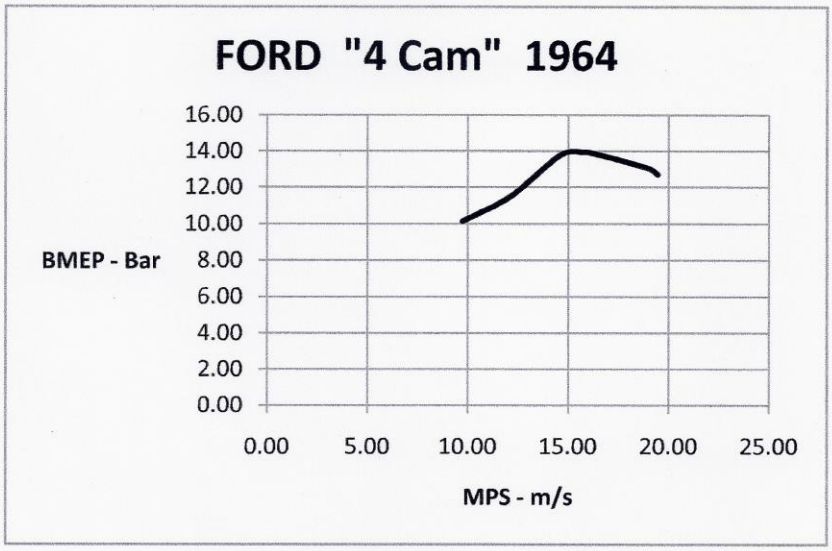

Fig. SO18A
1965.5 Honda RC149
IL5 a/c 35.5/25.1 = 1.414 124.2 cc
32.7 HP @ 20,000 RPM; ECOM = 50.6%
To maintain equal and optimum pipe lengths to each exhaust that from the middle cylinder of the transverse 5 curled round from the left under the tank and finished in the megaphone under the rider's right thigh!
The NA volume specific output of 263 HP/Litre was not equalled until 1999 by the Ilmor FO110H, which had the Combustion Efficiency advantage of a much larger Bore to achieve it at 17,500 RPM instead of 20,000 (but had to solve the problem of a very much higher Mean Valve Speed with a pneumatic return system (PVRS)).
The plastic petrol tank has an unpainted vertical strip graduated to show the fuel contents.
DASO 74 p.91

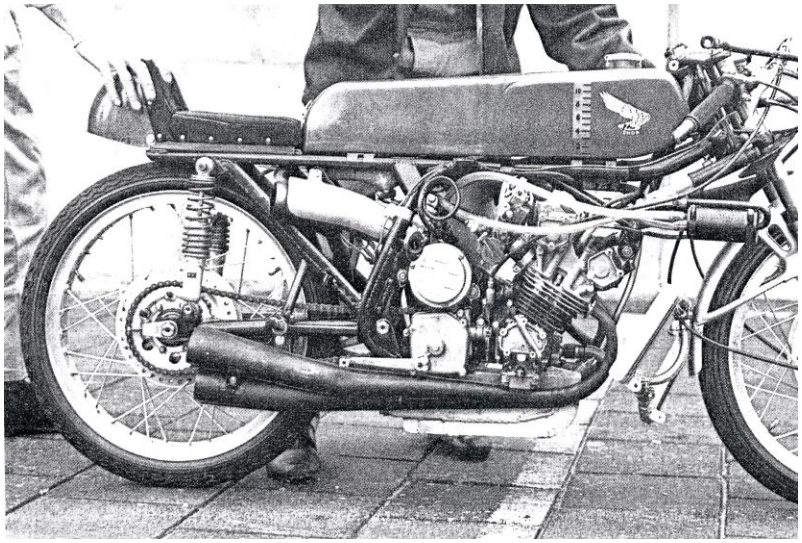

Racing success

Luigi Taveri won the motorcycling 125 cc World Championship in 1966 on the RC149, the only full year in which it competed.

Comparison with 1962 "Offy"

A comparison with the 1962 "Offy" is between a very-large cylinder size and a very-small one:-

		Details from Appendix 1 at specified row	
Engine	1962 Offy	1965.5 Honda RC149	Honda v. Offy
Example	SO16	SO18	
	Both NA		
Fuel	Methanol	Petrol/*100 RON*	
Row 56 V/CN cc per cylinder	1032.0	24.8	2.4%!
Row 73 MPSP m/s	24.82	16.73	-32.6%
Row 74 BMPP Bar	12.94	11.78	
Row 80 BMPA/MDR			
See Glossary at Row 79 for definition			
(MDR =1)	11.13	12.11	+8.8%
ECOM = Row 80 x 100/23.94	46.5%	50.6%	+ 4.1 %points

Despite the disadvantage in Combustion Efficiency (EC) of the Honda from its very-small cylinder (i.e. much higher Surface Area/Volume ratio, which is proportional to 1/Dimension) the super-tuned exhaust system produces a rather better BMPA .

A Power Curve for the RC149 is given on the next page.

POWER CURVES

Eg.	SO18
DASO	354
YEAR	1965.5
Make	Honda
Model	RC149
Vcc	124.2
Ind. System	NA
Confign.	IL5 a.c.
Bmm	35.5
Smm	25.1

N	P	MPS	BMEP
kRPM	HP	m/s	Bar
15	23.7	12.55	11.38
16	24.5	13.39	11.03
17	25.2	14.22	10.68
18	27.6	15.06	11.05
19	31	15.90	11.76
19.5	32.04	16.32	11.84
20	32.7	16.73	11.78
20.5	32	17.15	11.25

Powers as published were kW and have been multiplied by 1.34 to convert to HP

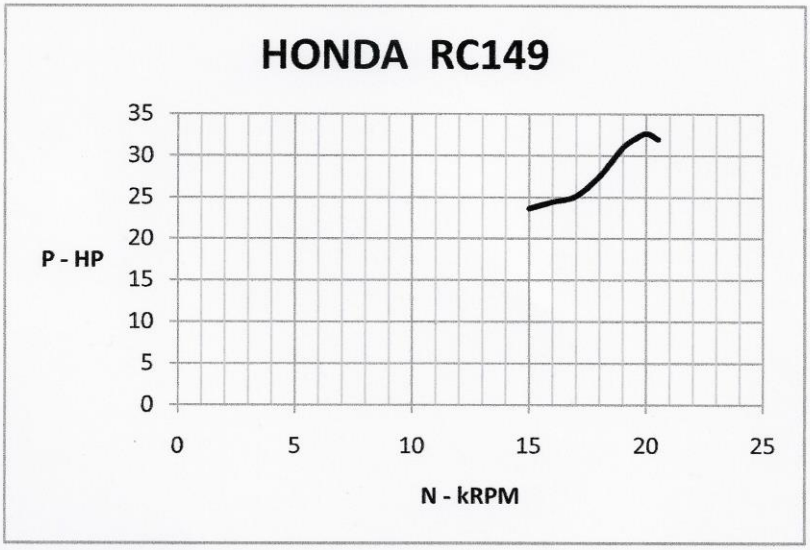

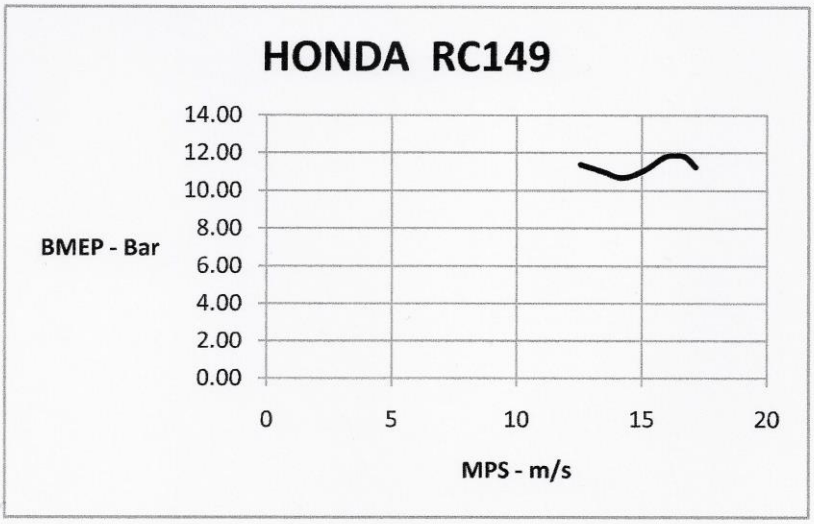

Fig. SO19A
1979 BMW M12/7
IL4 89.2/80 = 1.115 1,999.7 cc
301 HP @ 9,250 RPM; ECOM = 62.1%
Designed by Paul Rosche.
This engine had a cylinder head closely based on that of the Cosworth FVA.
DASO 454

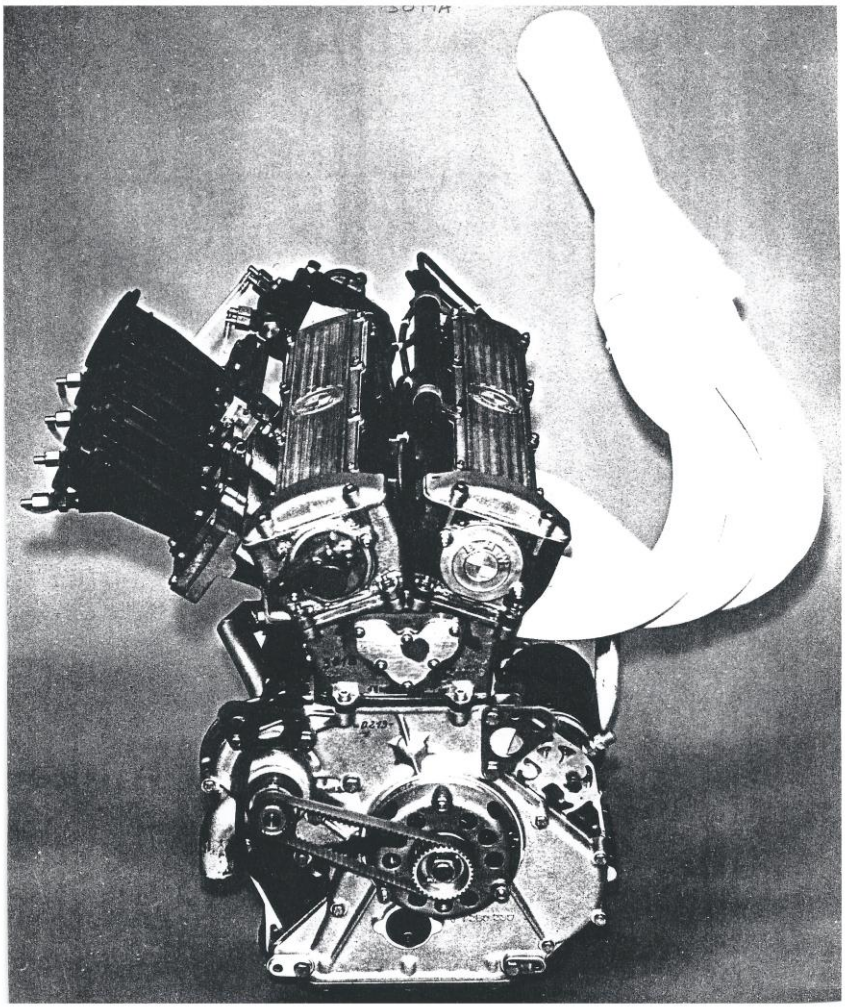

M12/7 successes

The M12/7 powered the Formula 2 European Champions 6 times over 1973 to 1982 inclusive (including a Schnitzer-tuned engine in 1975.

Pressure-Charged 1.5 Litre Grand Prix development

When de-stroked to 60 mm and TurboCharged as the M12/13 it displaced the Cosworth FVA engine's "big brother", the DFV, from the F1 World Drivers' Championship in 1983.

A Power Curve for the M12/7 is given on the next page.

POWER CURVES

Eg.	SO19
DASO	454
YEAR	1979
Make	BMW
Model	M12/7
Vcc	1999.7
Ind. System	NA
Confign.	IL4
Bmm	89.2
Smm	80

N	P	MPS	BMEP
kRPM	HP	m/s	Bar
4	106.5	10.67	11.91
5	135	13.33	12.08
6	177.5	16.00	13.24
7	233.8	18.67	14.95
8	276	21.33	15.44
8.5	291	22.67	15.32
9	300	24.00	14.92
9.25	301	24.67	14.56
9.75	296	26.00	13.59

Powers as published were German PS and have been divided by 1.014 to convert to HP

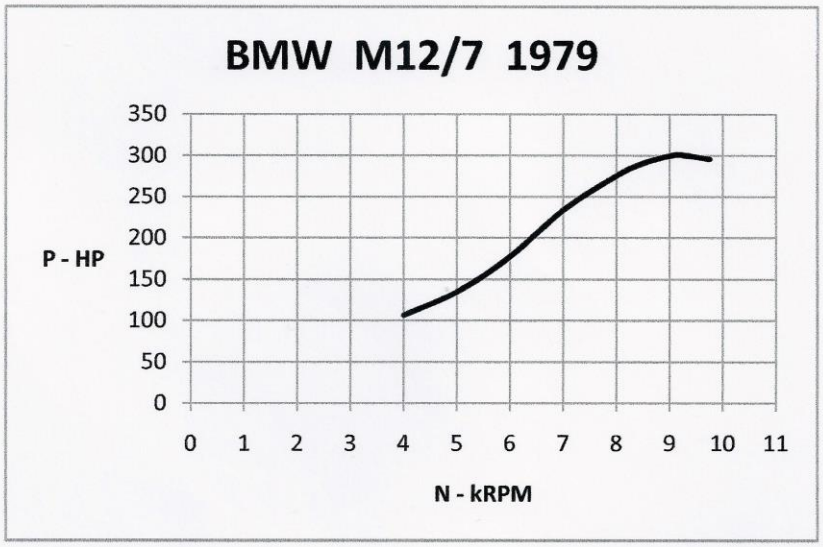

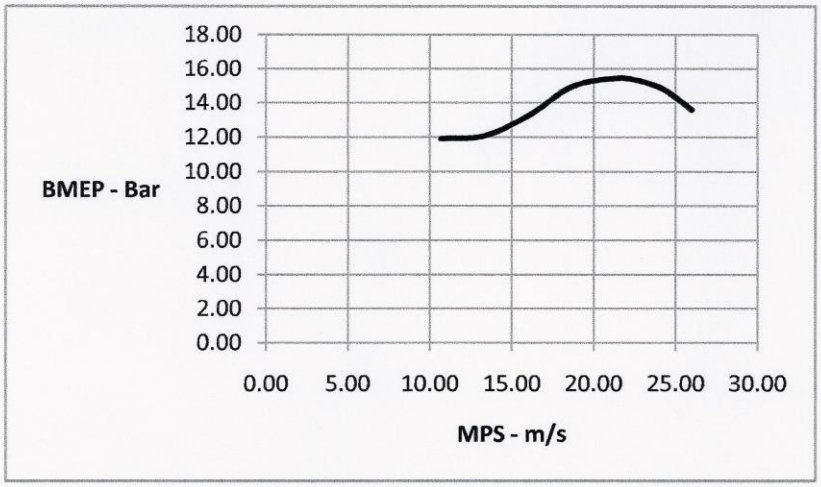

SO20: 3.5L 1992 Honda RA122E/B (See Fig. SO20A on P.3 and Power Curve on P. 4)

The CoY for 1992 was the Williams FW14B/Renault RS3 & RS4 and these engines will be described later as Eg. 75. It is well worth including a description of the defeated rival power unit, the Honda RA122E/B, as a "Significant Other" because it was the subject of a detailed JSAE paper by the company in 1993 (69) after they retired from racing. This paper provides one of the two pieces of substantial and authentic data released for the 3rd NA Era (the 2000 Ferrari 049 CoY is included as Eg. 85). Full details are included in Appendix 1 as SO20.

General description of Configuration and associated sytems

Honda produced this 3rd V12 for 1992 with 75^0 vee angle and B/S increased to 88/47.9 = 1.837 (respectively $+15^0$ and + 5.3% over their previous design). It included a nitrogen Pneumatic Valve Return System (PVRS), Variable Inlet System (VIS) (with a 1.12 telescopic ratio) and a new feature:- "Drive-by-Wire" (DBW). The latter replaced the previously-universal mechanical linkage between the accelerator pedal and the engine throttles with an electrical system using a potentiometer controlling a stepper motor which rotated the butterflies in the inlet tracts, non-linearly to suit the power response requirements. This DBW was an integral part of an ECU operating the servo system of a new McLaren 6-forward-speed gearbox which went further than the Semi-Automatic-Gearboxes (SAGB) of Ferrari and Williams by providing, when selected, *fully-automatic* up/down changes through the ratios. Traction control (in use by Williams from the start of the year) was added at the 11th race (Hungary) (992).

Other details

Other engine details broadly were as usual for the date except that, with N_2 PVRS providing a higher valve control capability, the exhaust valves were not Ti-alloy but hollow austenitic steel. The PVRS inlet valve piston was 90% of the diameter of the valve head which was the largest which could be accommodated with paired parallel valves. The closed gas pressure was 8 Bar, reduced by a valve from a reservoir bottle at 150 Bar.

Inlet tract

Inlet tract downdraught angle was 42^0 (i.e. 48^0 bulk turning) and the outer wall of the tract was 20^0 non-orthogonal to the valve head to promote Tumble Swirl. With VIA = 29^0, the ratio IVL/IVD was 0.32 and IVA/PA = 0.344.

The VIS shut position gave LIN = 214 mm, corresponding to a 1st resonant MPS of 19.7 m/s (see Note 27), the open length at 1.12 longer giving a 1st resonance at 17.6 m/s. The hydraulically-operated telescopes were actually cycled by the ECU Open/Shut 3 times in the RPM range 8,000 to 15,000 (Red Line) so as to optimise other frequencies and improve torque by 14% at 8,500 and 12% at 10,750 (17 m/s) and very slightly at 13,750 (the VIS open at these speeds). Peak Torque (TP) was at 12,000 RPM (19.2 m/s) and Peak Power (PP) at 14,400 (23 m/s), the VIS being shut at these speeds.

There were dual fuel injectors in each tract.

Compression ratio (R)

Compression Ratio was 12.9 and development work was needed to improve Combustion Efficiency (EC) by reshaping the piston crown. The application of DBW + ECU assisted the creation of high R since a space allowance for valve bounce on overspeed was no longer necessary.

Exhaust tract

Exhaust updraught was 36^0 (i.e. 54^0 bulk turning). The exhaust primary pipes gave a 2.6 expansion ratio from the valve throats, followed by a 1.7 area ratio in the 6-into-1 tail pipe, a total of 4.4.

Pistons and Con.-Rods

The pistons had Bore/Total Height ratio (B/PH) of nearly 2. The non-side-thrust portion was cut away over the lower 2/3rds of height by 1/2 of the circumference.

The Connecting Rod Length-between-Centres/ Stroke (CRL/S) was 2.32.

Crankcase depression

It was confirmed that the oil/air scavenge capacity was now large enough to run the crankcase at an absolute 0.3 ATA, producing a *net* power gain, after subtracting the extra pumping power needed, of nearly 3% relative to an atmospheric level.

Fuel

Up to the Hungarian GP the fuel companies (Shell in Honda's case) had continued to produce special "Petrols" (see Note 90 Sub-Note B). FISA then imposed a ban on any constituent not found in ordinary pump fuel. This "Real Petrol" dropped the RA122E/B power from 804 to 764 BHP (-5%).

Performance factors

After the fuel change the performance factors were as follows – the developed Cosworth DFV has been included for illustration of 10 years advances:-

See Glossary for explanation of abbreviations

Year	1982	1992	
Type	3.0L Cosworth DFV*	3.5L Honda RA122E/B	Honda v. Cosworth
	90V8 85.6742/64.77	75V12 88/47.9	
	= 1.323 2,987 cc	= 1.837 3,496 cc	
PP HP	515	764	48.3%
@ NP RPM	11,300	14,400	+27.4%
PP/V HP/Litre	172.4	218.5	+26.7%
BMPP Bar	13.65	13.58	-0.5%
@ MPSP m/s	24.40	22.99	-5.8%
BMPA/MDR Bar	13.66	13.36	-2%
ECOM**	57.0%	55.8%	-1.2%points
NP -NT			
NP	≈19.6%	16.7%	-2.9%points
MGVP m/s	75.3	66.82	-11.3%
BNP m/s	16.14	21.12	+30.9%
MVSP m/s	4.96	5.84	+17.7%
MPDP g	5,750	6,750	+17.4%
CRL/S	2.05	2.32	
(CP/S)/√(BNP)	0.189	0.182	-3.7%

* Judd-tuned for Williams

** ECOM = BMPA/MDR x $\left(\frac{100}{23.94}\right)$

Basically, with BMPP practically constant (- 0.5%), the 10 year improvement of 26.7% in Volume-Specific Power, from 172.4 to 218.5 HP/Litre, was due to the reduction in Stroke (S) from 64.77 mm to 47.9 (1/S = +35.2% through using more cylinders and higher B/S ratio, offset by a 5.8% drop in MPSP $\left(0.995 \times \frac{1.352}{1.058} = 1.27\right.$: see The General Design of Racing Piston Engines at p.3$\left.\right)$

Simultaneously it was necessary in the Honda :-

- To manage increased MVSP by use of lower-density valves returned by a surge-resistant system (PVRS);
- To avoid piston-ring flutter (the ring width is not known);
- To prevent a significant drop in Mechanical Efficiency (EM) by using relatively shorter and lighter pistons having reduced rubbing surfaces, on con. rods with increased CRL/S.

Racing history

The new Honda 75V12 was not ready until the 3rd race of the 1992 season (because of effort put into maintaining the 1991 engines at competitive level), when it powered the equally-new McLaren MP4/7A; The virtually-unaltered 60V12 in the MP4/6B served at first. The Williams competition had now moved on to active-chassis-suspension and this proved generally too fast for either McLaren, although the /7A won 5 races.

Ron Dennis' opinion

The considered thoughts of Ron Dennis, Principal of McLaren. about the RA122E/B in an interview 8 months after last racing it (1004) are relevant. He *seemed* to agree (not being a man to give many secrets away!) that the pursuit of peak power had been carried too far so that high RPM led to high fuel consumption and high heat rejection (and consequently a heavier cooling system). Plus being basically heavy and long. These points could only mean in relation to the Renault RS3 and RS4 V10s which powered the Williams 1992 Championships after 4 McLaren/Honda years and also to the Cosworth HB7 V8 he was racing in mid-1993.

Fig. SO20A
1992 Honda RA122E/B
75V12 88/47.9 = 1.837 3,496 cc
764 HP @ 14,400 RPM
Most of the special features of this engine have been described in the text but it will be seen that the cams (operating on tappet/PVRS pistons) are symmetrical,
unlike the RA168E (operating on finger followers).

DASO 69

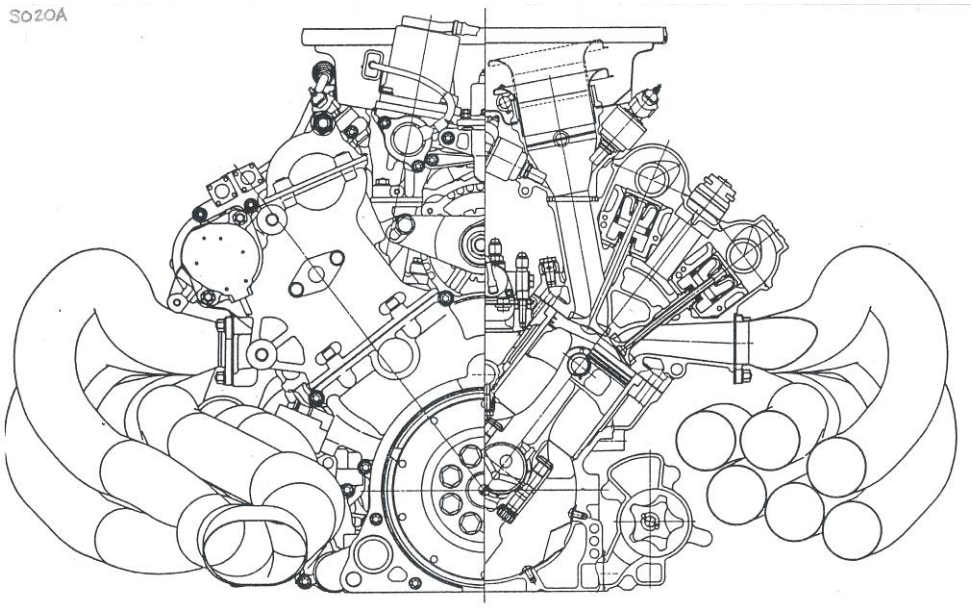

POWER CURVES

Eg.	SO20
DASO	69
YEAR	1992
Make	Honda
Model	RA122E/B
Vcc	3496
Ind. System	NA
Confign.	75V12
Bmm	88
Smm	47.9

VIS in operation

Powers as published were kW and have been multiplied by 1.34 to convert to HP

N	P	MPS	BMEP
kRPM	HP	m/s	Bar
8	302	12.77	9.66
8.5	429	13.57	12.92
9	469	14.37	13.34
9.5	501	15.17	13.50
10	510	15.97	13.05
10.2	516	16.29	12.95
10.8	603	17.24	14.29
11	622	17.56	14.47
11.8	670	18.84	14.53
12	679	19.16	14.48
12.5	690	19.96	14.13
13	704	20.76	13.86
13.5	737	21.56	13.97
14	757	22.35	13.84
14.4	764	22.99	13.58
15	737	23.95	12.58

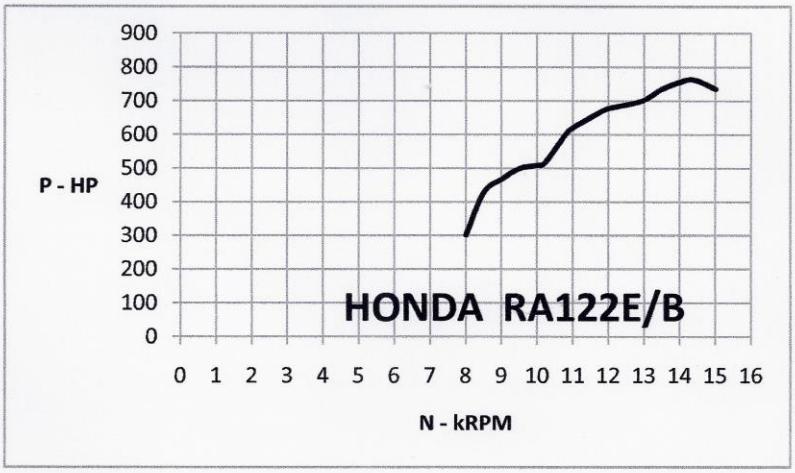

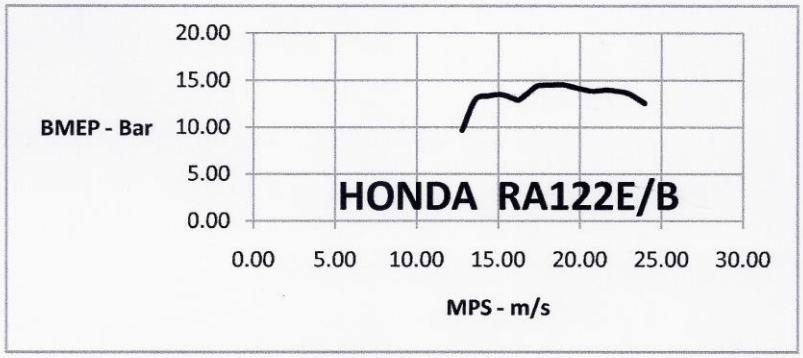

Fig. SO21A

1995 Cosworth AC

90V8 92/56.3 = 1.634 2,994 cc

500 HP @ 9,000 RPM. ECOM = *68.1% (?).*

Designed by Geoff Goddard and Peter Williams.

When F3000 was instituted in 1985 it was intended to make use of the many redundant Cosworth DFV engines no longer competitive in Grand Prix racing. To keep costs down maximum RPM were limited to 9,000 and Ti-alloy was banned from con-rods.

By the early '90s new engines aimed specifically at F3000 were produced by Judd and Mugen to threaten the DFV, although the latter had been redeveloped specially for the Formula.

The type AC was therefore purpose designed by Cosworth for 1993 F3000 racing.

The performance quoted was that of the Nicholson McLaren-tuned engine in 1995, their products having powered the F3000 Champions in 1993, 1994 and 1995 (1067).

Changes from the DFV were:- Higher B/S ratio; chain-driven camshafts; narrower VIA; cylinder liners supported half-way down the bore instead of at the top; the new Cosworth-developed Al-alloy casting process (giving 20% better strength than the book from reduced porosity).

The long inlet tracts were matched to the 9,000 RPM limit.

The remarkable feature of the AC was a Peak Power BMEP (BMPP) of 16.6 Bar. This was made possible by a Mean Piston Speed (MPS) of only 17 m/s which, with the limited RPM, produced a very high Mechanical Efficiency (see Note 99).

DASO 65

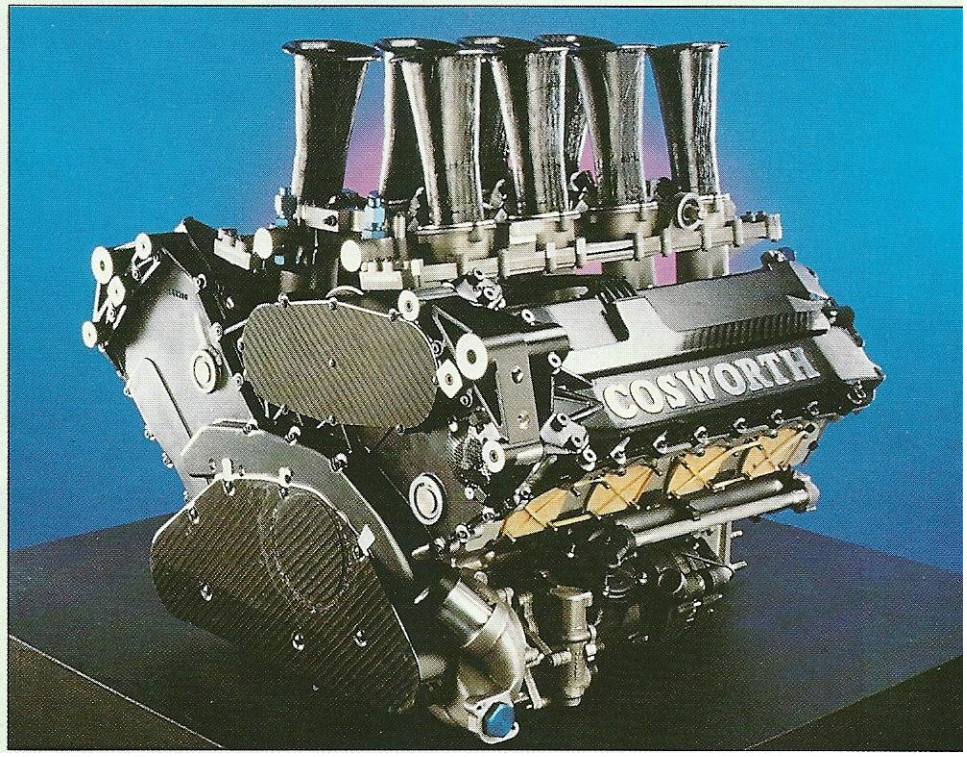

Fig. SO22A

1995 Opel DTM/1

54V6 89/66.9 = 1.33 2,497 cc

444 HP @ 11,500 RPM. ECOM = 57.3%.

The “Deutsche Tourenwagen Meisterschaft” (DTM) series in 1995 to FIA Class 1 rules permitted nearly-pure NA racing engines to be used, provided that the cylinder block, not exceeding 6 cylinders, was the same overall dimensions and material as a production unit, that the con-rods were steel, PVRS was not allowed and max. permitted RPM were 12,000.

Opel had engaged Cosworth to develop an engine from its “Ecotec” 54V6 block in 1993 as their type KC (“C” presumably for “Calibra”, the production car whose outline the racing car had to follow). It is believed that the 1994 version was KD, the 1995 the KE (since for 1996 a new start was made as Cosworth type KF).

The Cosworth engineers involved in the 1995 engine were Geoff Goddard and John Hilton.

Within the given constraints the engine was “state-of-the-art”.

The racing car was 4WD, with the drive to the front half-shafts transferred forward alongside the engine by spur gears.

DASO 281

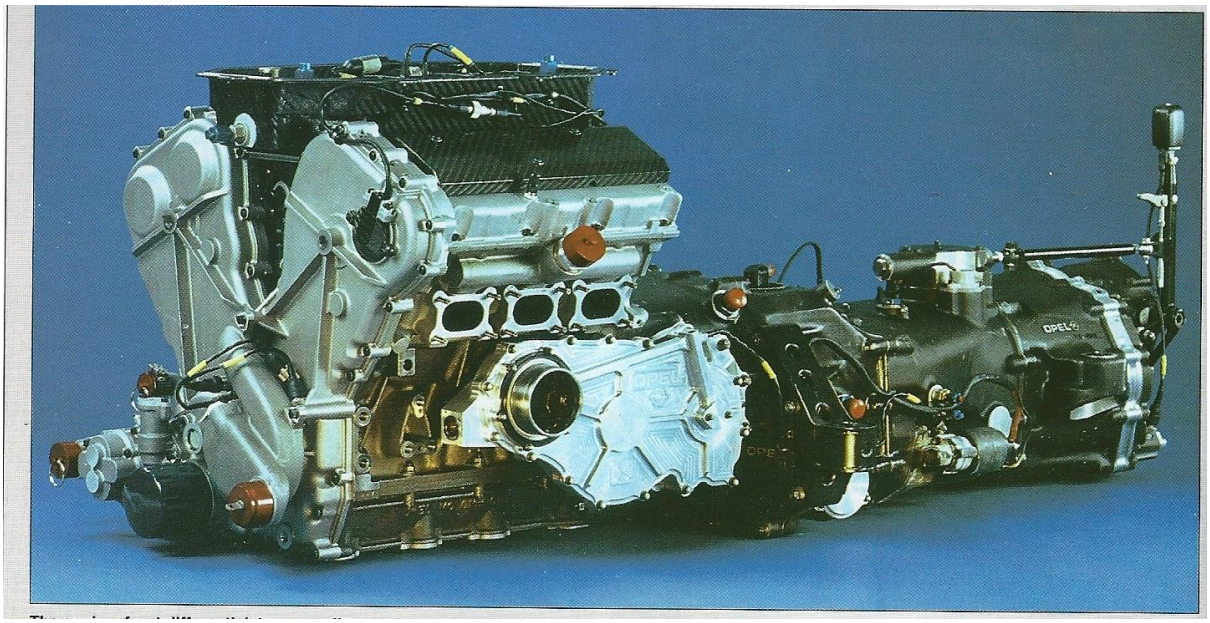

Opel achieved only 3rd place in the 1995 DTM series (but the ‘KF’ powered the 1996 Championship Winner).

Fig. SO23A
1987 Vauxhall XE
IL4 86/86 = 1 1,998 cc

Representing
1995 Vauxhall BTCC
IL4 88/82 = 1.073 1,995 cc
295 Hp @ 8.400 RPM. ECOM = 65.8%.

The Vauxhall "Cavalier" XE DOHC cylinder head was developed by Cosworth as their type KBA. The section shows that it included the feature in the inlet port necessary to produce "Barrel Turbulence" (aka "Tumble Swirl") (see "The Unique Cosworth Story").

The unit was raced at the original B/S in the British Touring Car Championship, tuned by Swindon Race engines (John Dunn).

In 1993 the cylinder head was reversed in the transverse production-car-type installation to provide cooler intake air and easier exhaust pipework.

In 1994 the B/S were altered as above. RPM were limited by regulation to 8,500 so there was reduced friction loss. BMPP was a remarkable 15.7 Bar at MPS as high as 23 m/s, considering that VIA = 46^0 was forced by production head bolt positions. The RPM restriction assisted in maintaining a fairly-high Mechanical Efficiency.

DASO 282

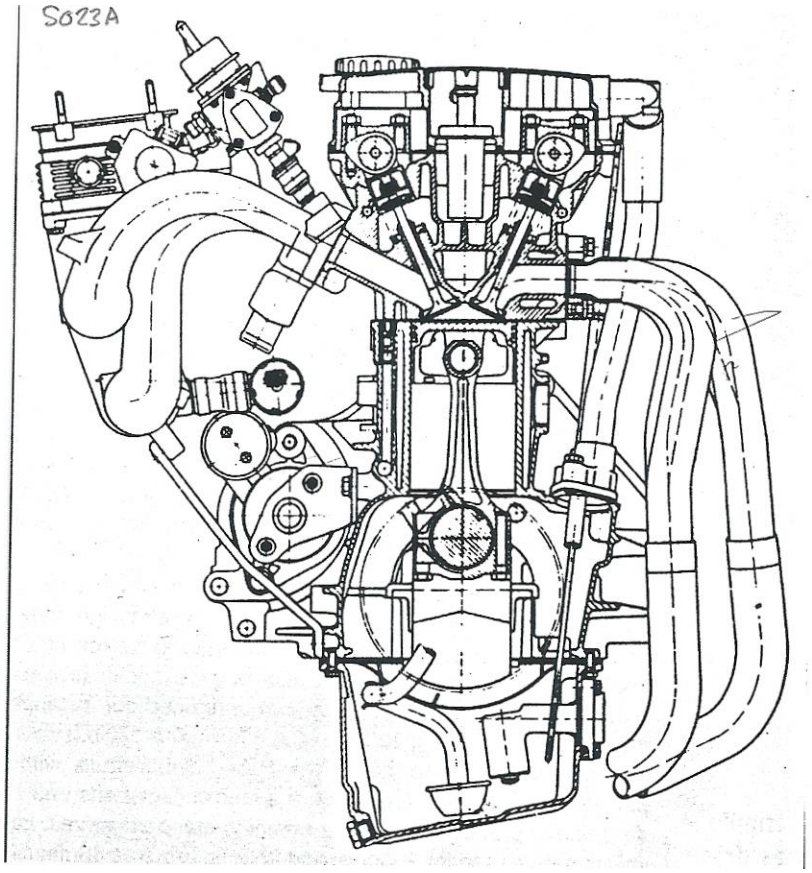

The engine powered John Cleland's "Cavalier" to win the 1995 BTC Championship.

Fig. SO24A

1998 Ford –Butch Mock Motorsports (BMS) NASCAR

90V8 4 1/8”/3 11/32” = 1.234 357.5 cid

(104.775 mm/84.93 5,858 cc)

735 HP @ 8,000 RPM on 104RON Petrol, unrestricted inlet. ECOM = 58.6%.

NASCAR Winston Cup* rules required:-

- A production cast-iron block;
- An approved wedge-combustion-chamber head (Al-alloy permitted);
- 2 in-line push-rod-operated (PROHV) valves per cylinder (solid Ti-alloy valves permitted);
- Inlet charge through a 4-choke carburetter (fitted with a restrictor plate for SuperSpeedways);
- Maximum Compression Ratio of 12;
- Flat crank.

*So titled over 1971 -2003; in 2008 titled “Sprint Cup”.

The remarkable feature of this PROHV engine was its Mean Valve Speed at Peak Power (MVSP) of 4.7 m/s, *assuming* an Inlet Opening Duration (IOD), not given, of 354^0.

DASO 691

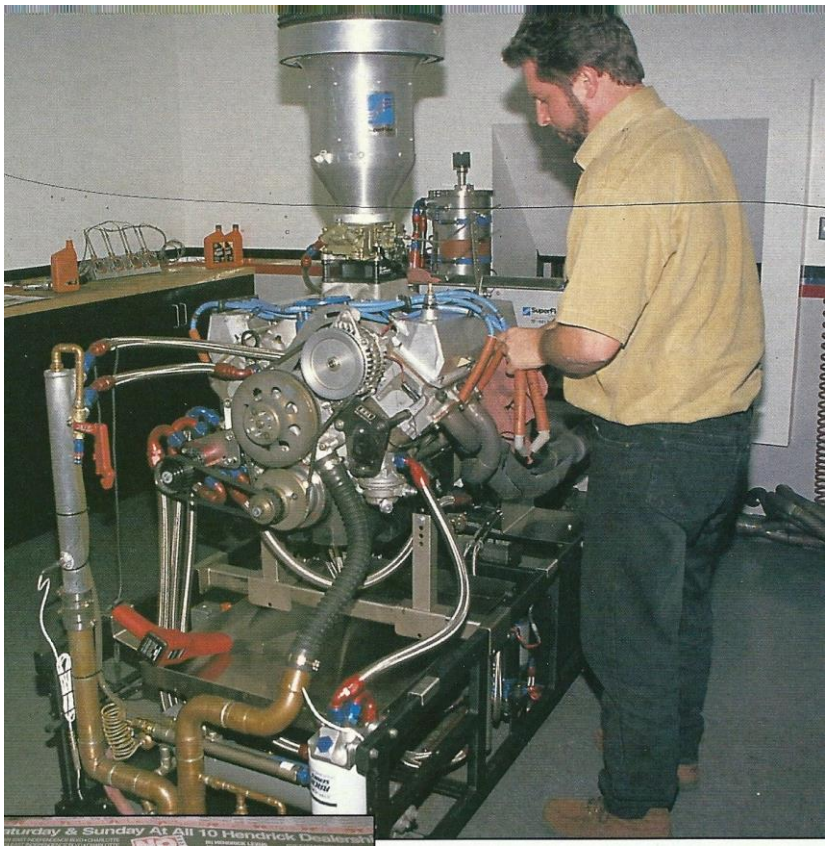

Racing results

BMS had no success with their car in 1998 but a Ford engine powered Dale Jarrett in another team to win the Winston Cup in 1999. This halted a Chevrolet run of 6 victories.